MACH MACHINE TOOLS

www.machmt.com

WIRING SCHEMATICS

MDS 700-4T / 900-4T

CNC Knee Mill with Tool Changer

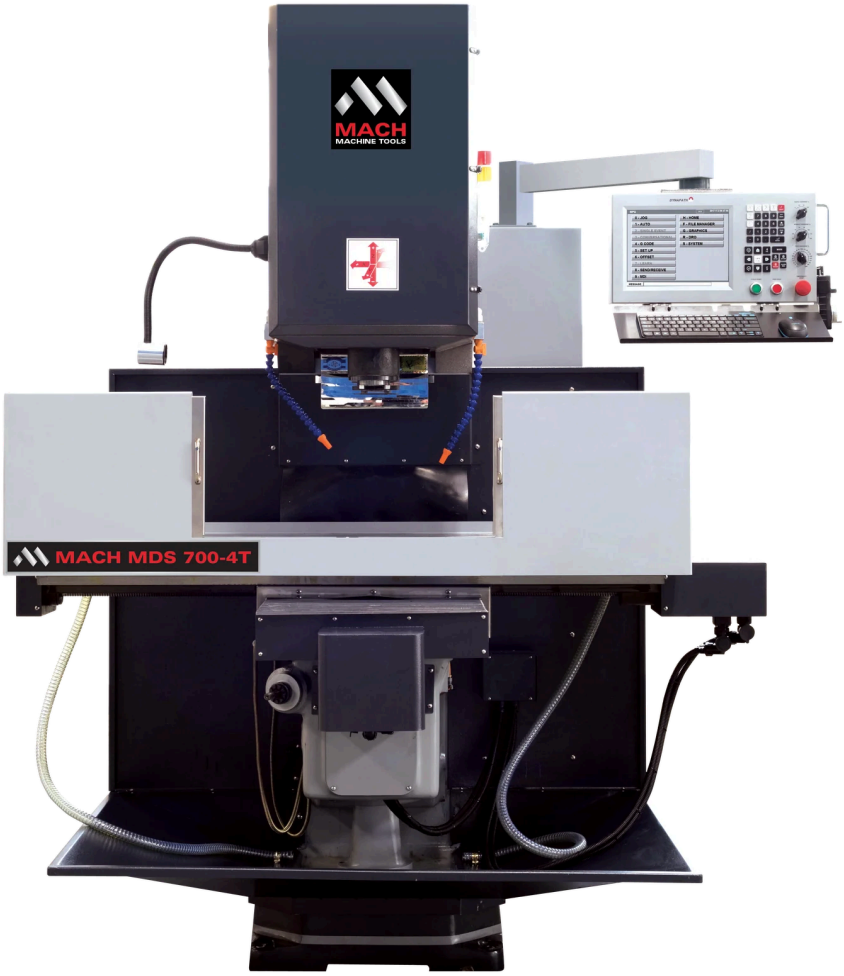

Wiring Schematics
Node-1000 + DB87360 CE

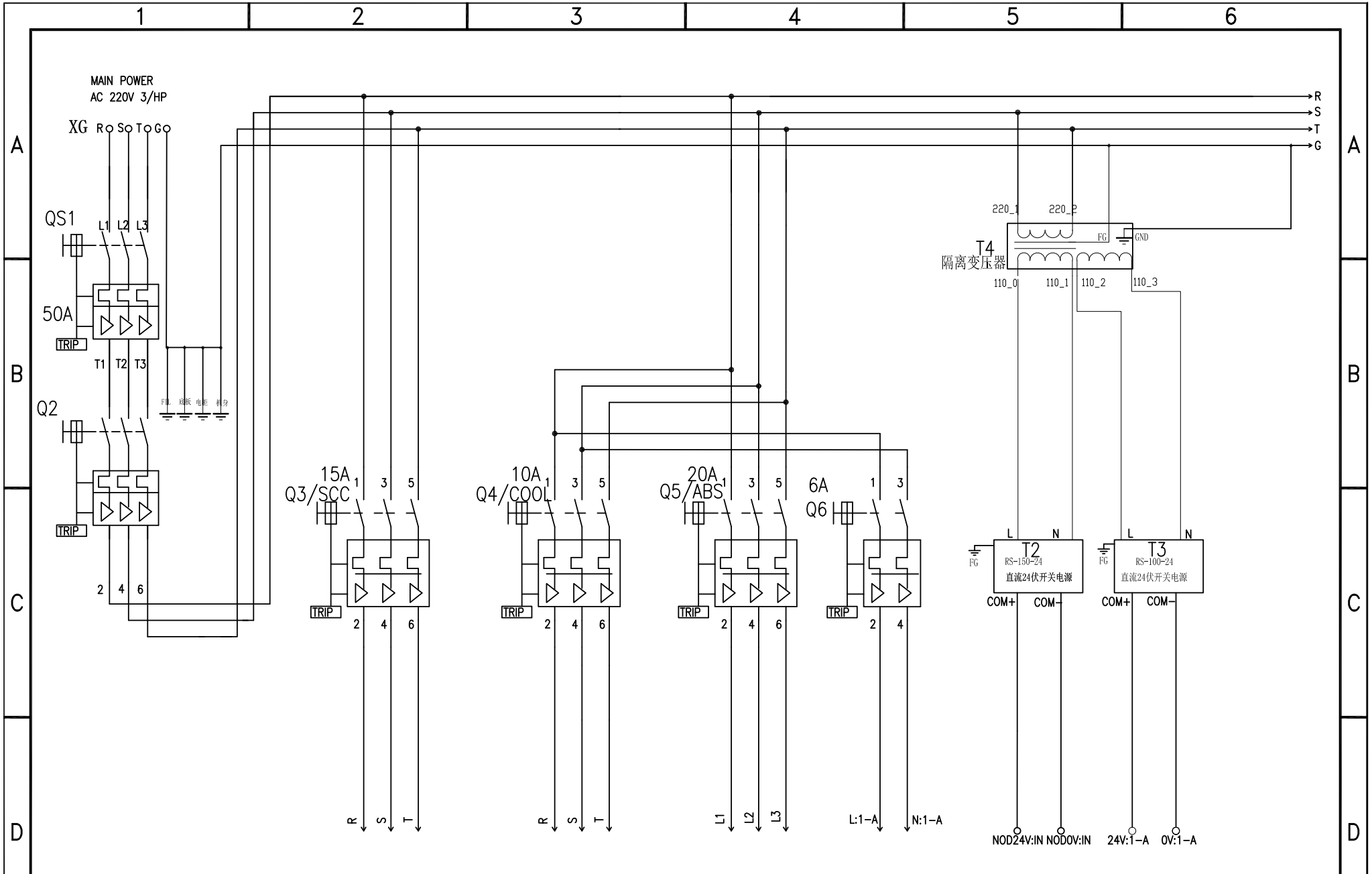

MACH Machine Tools	Description	ON/OFF POWER	Machine	CNC	Date			
	Drawing NO		Revision	2014.6.25-87363A1	Drawn by		PAGE	A5

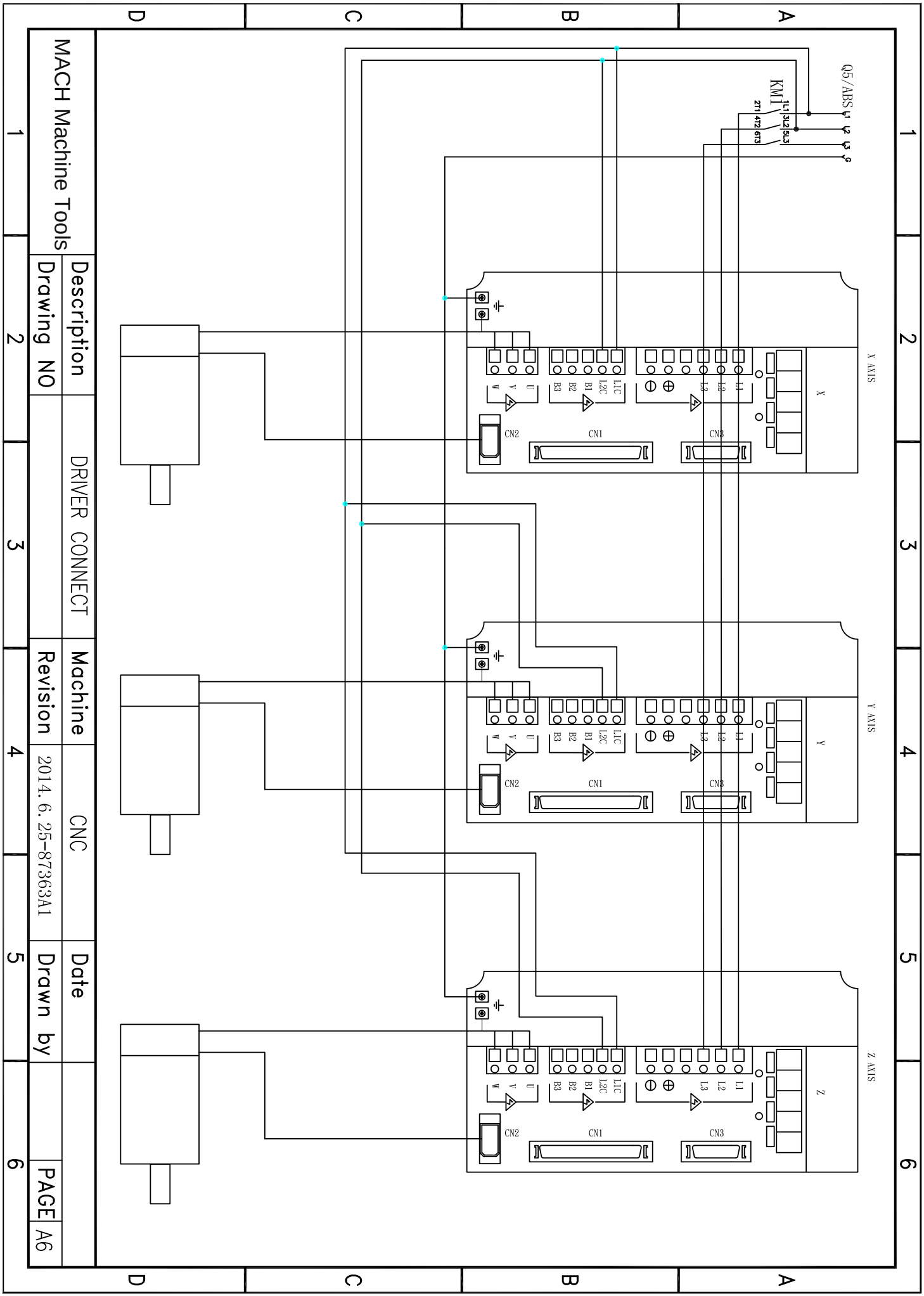
Q5/ABS
KM1
1L1 3L2 5L3
2T1 4T2 6T3
L1 L2 L3
X AXIS
X
Y AXIS
Y
Z AXIS
Z
CN1
CN2
CN3
L1 L2 L3
L1C L2C
B1 B2 B3
U V W
MACH Machine Tools
Description
DRIVER CONNECT
Machine
CNC
Date
Drawing NO
Revision
2014.6.25-87363A1
Drawn by
PAGE
A6

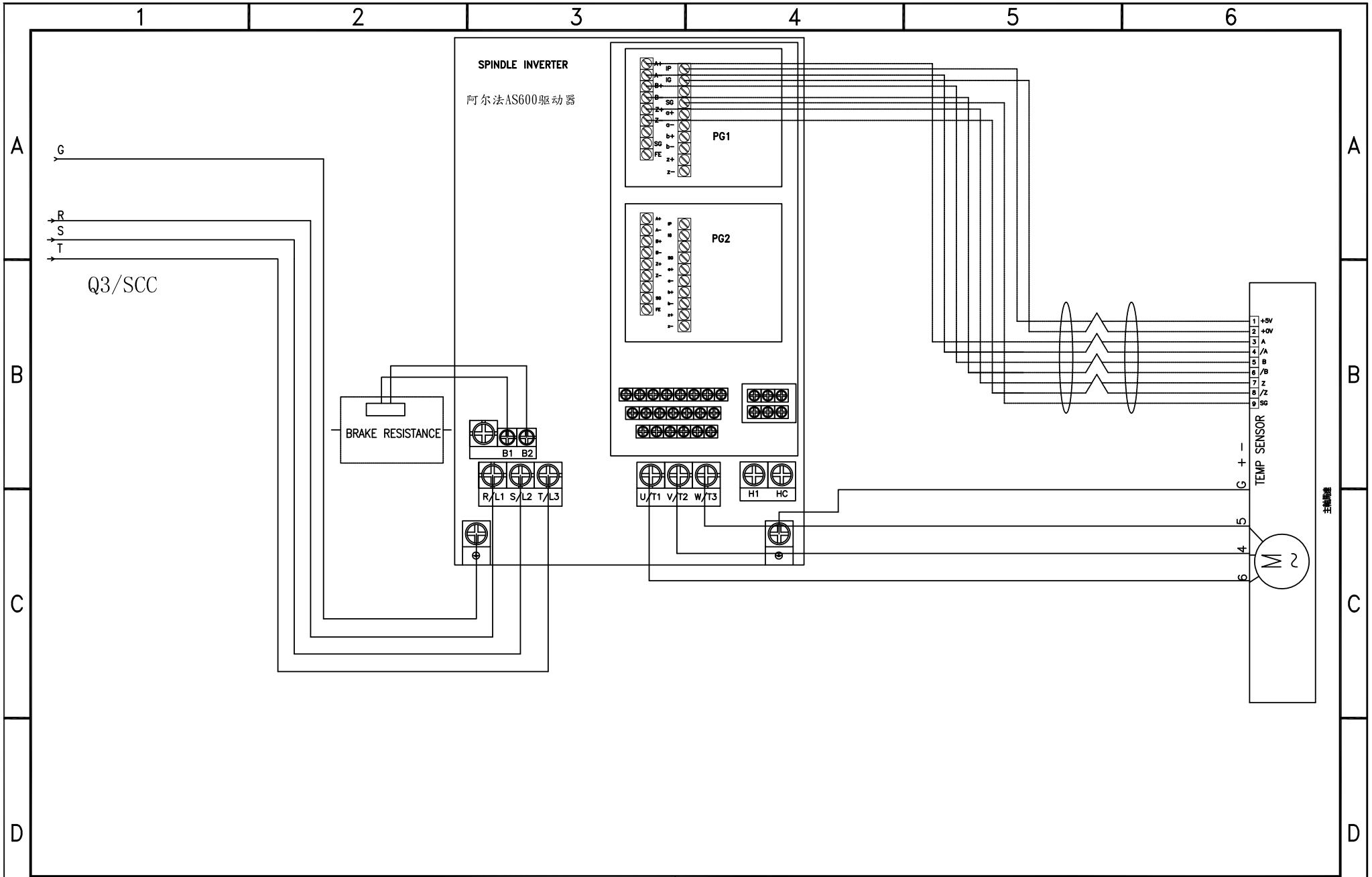

MACH Machine Tools	Description	SPINDLE INVERTER POWER DIAGRAM	Machine	CNC	Date	
	Drawing NO		Revision	2014. 6. 25-87363A1	Drawn by	PAGE A7

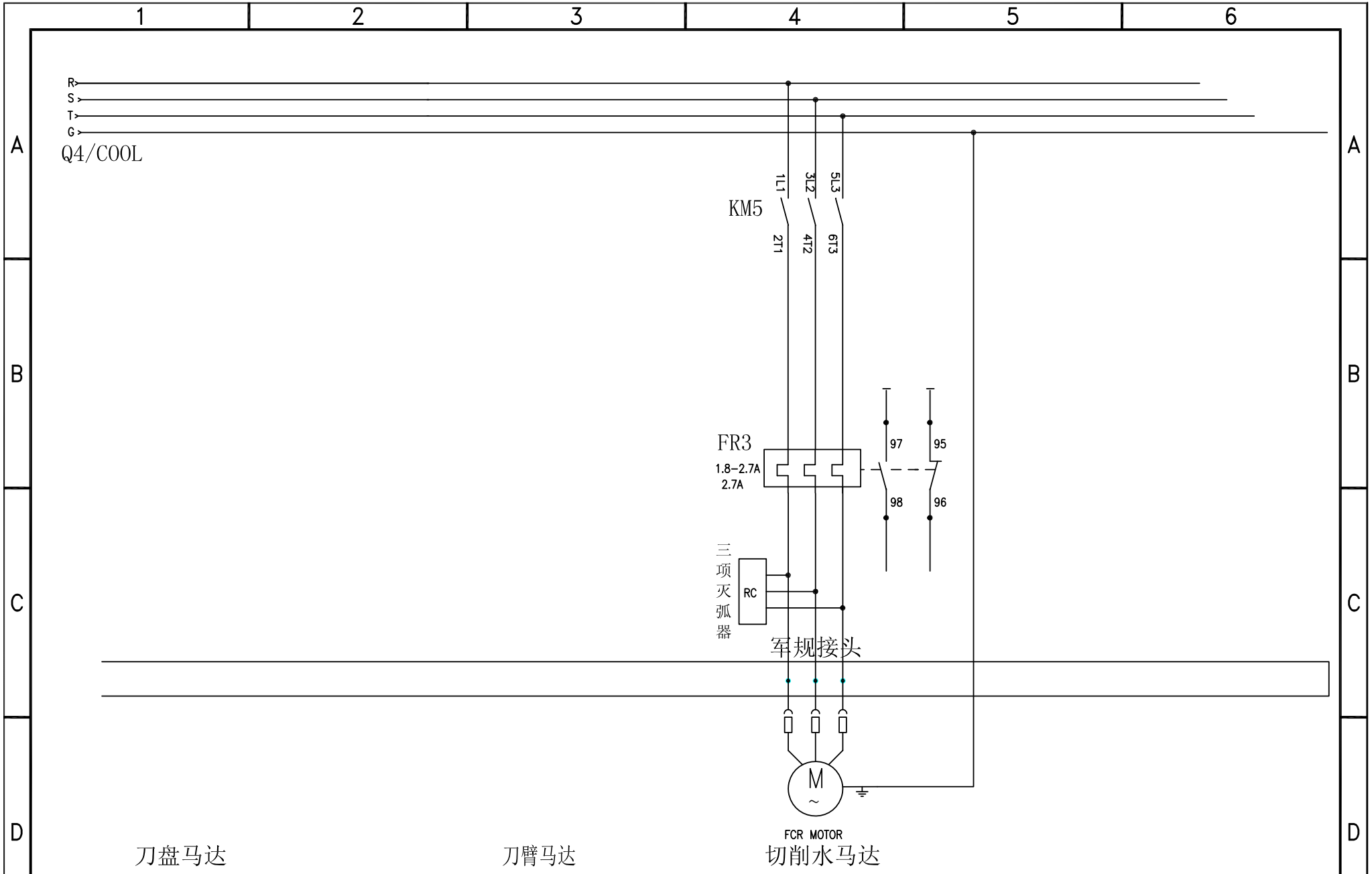

MACH Machine Tools	Description	MAIN POWER & MOTOR	Machine	CNC	Date		
	Drawing NO		Revision	2014.6.25-87363A1	Drawn by	PAGE	A8

SIZE	DRAWING	SHT.	REV.
D	MC_87363_13	13 OF 13	A

PROPRIETARY INFORMATION
This drawing contains information proprietary to MACH Machine Tools Ltd and its suppliers. It may not be reproduced or disclosed to any other person or organisation without the prior written consent of MACH Machine Tools Ltd.

MISCELLANEOUS I/O

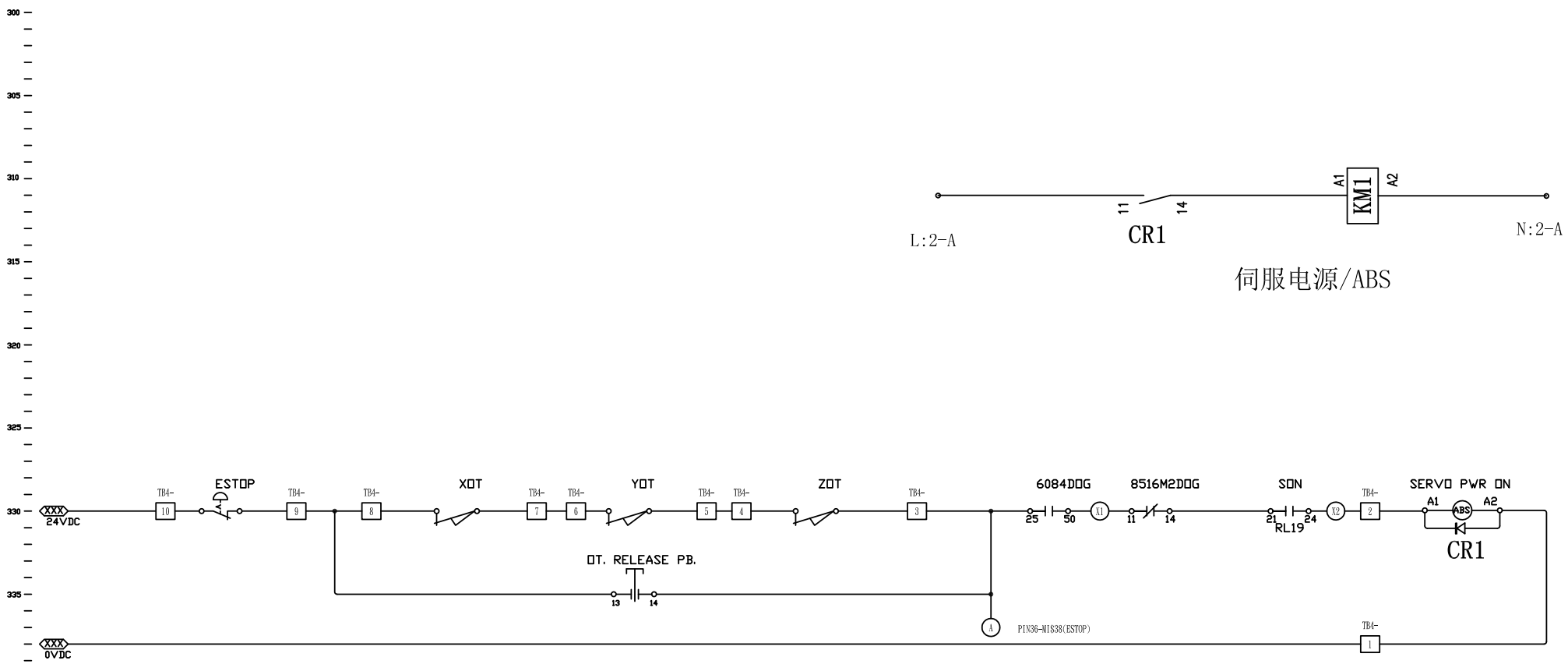

QTY.	PART NUMBER	ITEM DESCRIPTION	ITEM

REV	ECN NO.	REVISION DESCRIPTION	REV BY	DATE	CHK BY	DATE	APP BY	DATE	BY
A	14569								

SURFACE TREATMENT ~

HEAT TREATMENT ~

FIRST USED ON ENGRAVING/MC

EXCEPT AS NOTED ALL CORNERS MUST BE AS FOLLOWS
INSIDE: .050" X 45° OR .05" R MAX
OUTSIDE: .030" X 45° OR .05" R

EXCEPT AS NOTED WELDING TOLERANCE MUST BE AS FOLLOWS ±.12

EXCEPT AS NOTED ALL DIMENSIONS IN INCHES TOLERANCE
DECIMAL
.X ±.0300
.XX ±.0150
.XXX ±.0050
.XXXX ±.0005
ANGULAR ± 0°30'

THIRD ANGLE PROJECTION

MACH Machine Tools Ltd

DESCRIPTION: SCHEMATIC SET

DRAWN	DATE	CHECKED	DATE	APPROVED	DATE
MARK	SEP_26				

SCALE: N/A
UNIT OF MEAS.: EA
SIZE: D
DRAWING: MC_87363_13
SHT. 5 OF 13
REV. A

CN L106-4

SIZE	DRAWING	SHT. / OF	REV.
D	MC_87363_13	13 / 13	A

PROPRIETARY INFORMATION
This drawing contains information proprietary to MACH Machine Tools Ltd and its suppliers. It may not be reproduced or disclosed to any other person or organisation without the prior written consent of MACH Machine Tools Ltd.

MISCELLANEOUS I/O

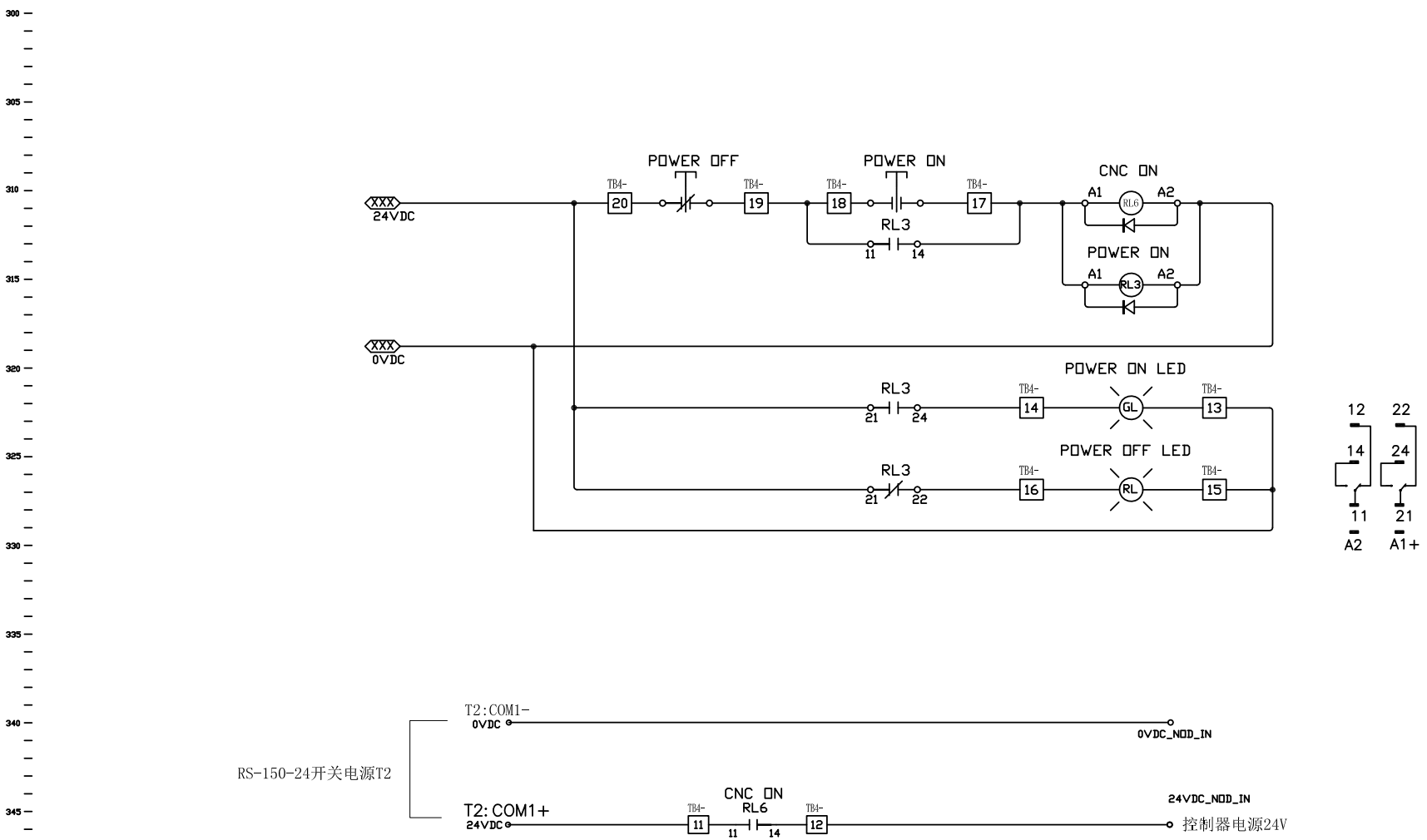

QTY.	PART NUMBER	ITEM DESCRIPTION	ITEM

REV	ECN NO.	REVISION DESCRIPTION	REV BY	DATE	CHK BY	DATE	APP BY	DATE	BY
A	14569								

SURFACE TREATMENT ~
HEAT TREATMENT ~
FIRST USED ON ENGRAVING/MC

EXCEPT AS NOTED ALL CORNERS MUST BE AS FOLLOWS
INSIDE: .050" X 45° OR .05" R MAX
OUTSIDE: .030" X 45° OR .05" R

EXCEPT AS NOTED WELDING TOLERANCE MUST BE AS FOLLOWS ±.12

EXCEPT AS NOTED ALL DIMENSIONS IN INCHES TOLERANCE
DECIMAL
.0 ±.0300
.00 ±.0150
.000 ±.0050
.0000 ±.0005
ANGULAR ± 0°30'

THIRD ANGLE PROJECTION

MACH Machine Tools Ltd

DESCRIPTION: SCHEMATIC SET

DRAWN	DATE	CHECKED	DATE	APPROVED	DATE
MARK	SEP_26				

SCALE N/A | UNIT OF MEAS. EA | SIZE D | DRAWING MC_87363_13 | SHT. 6 OF 13 | REV. A

CN L106-4

SIZE	DRAWING	SHT.	REV.
D	MC_87363_3	3 OF 13	A

PROPRIETARY INFORMATION
This drawing contains information proprietary to MACH Machine Tools Ltd and its suppliers. It may not be reproduced or disclosed to any other person or organisation without the prior written consent of MACH Machine Tools Ltd.

SPINDLE SYSTEM

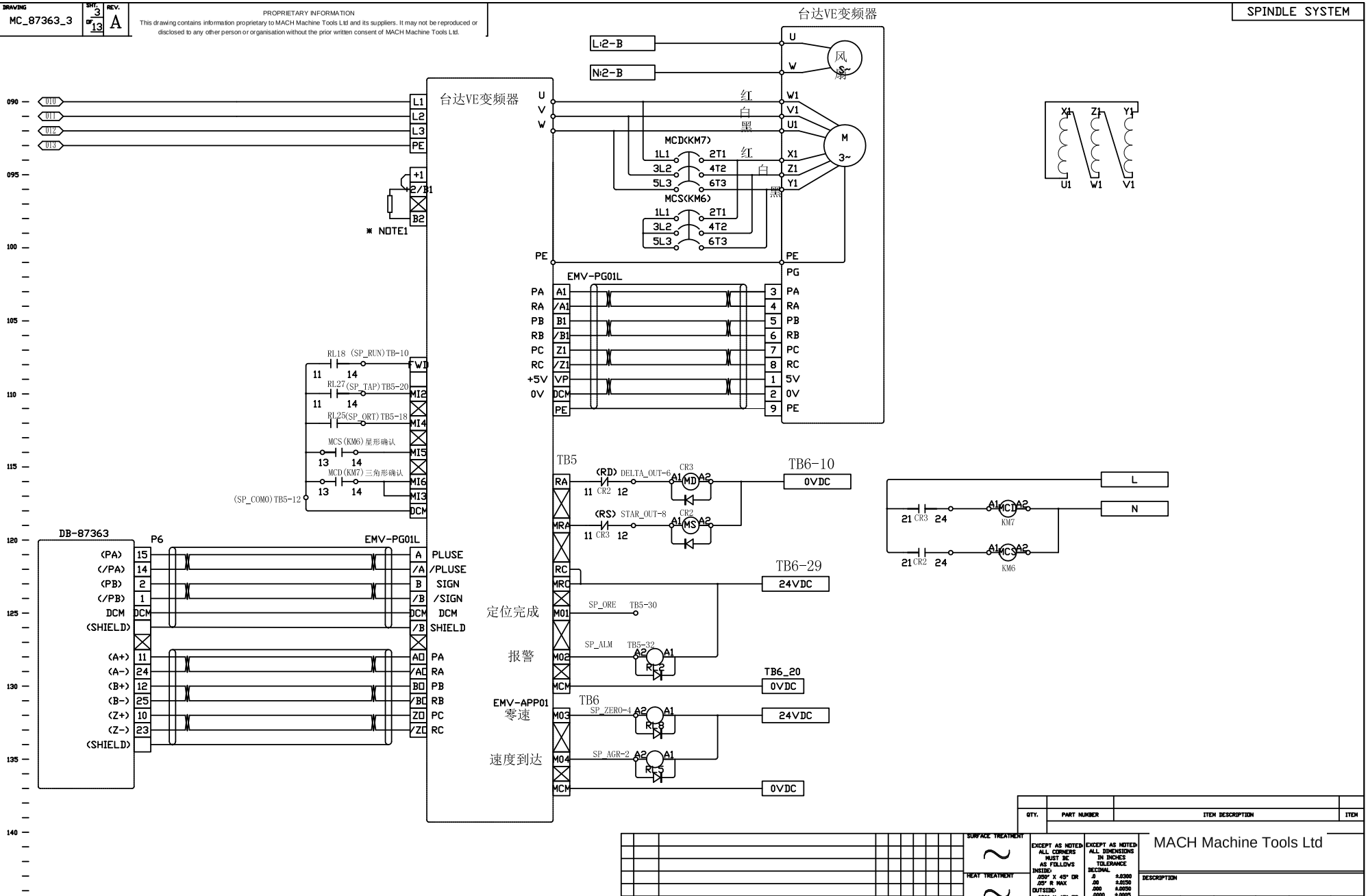

QTY.	PART NUMBER	ITEM DESCRIPTION	ITEM

REV	ECN NO.	REVISION DESCRIPTION	REV BY	DATE	CHK BY	DATE	APP BY	DATE	DF BY
A	14569								

SURFACE TREATMENT ~
HEAT TREATMENT ~
FIRST USED ON ENGRAVING/MC

EXCEPT AS NOTED ALL CORNERS MUST BE AS FOLLOWS
INSIDE: .050" X 45° OR .05" R MAX
OUTSIDE: .030" X 45° OR .05" R

EXCEPT AS NOTED WELDING TOLERANCE MUST BE AS FOLLOWS ±.12

EXCEPT AS NOTED ALL DIMENSIONS IN INCHES TOLERANCE
DECIMAL .0 ±.0300 .00 ±.0150 .000 ±.0050 .0000 ±.0005
ANGULAR ± 0°30'

THIRD ANGLE PROJECTION

MACH Machine Tools Ltd

DRAWN	DATE	CHECKED	DATE	APPROVED	DATE
MARK	SEP_26				

SCALE N/A | UNIT OF MEAS. EA | SIZE D | DRAWING MC_87363_3 | SHT. 3 OF 13 | REV. A

CN L106-3

MACH MACHINE TOOLS

PROPRIETARY INFORMATION
This drawing contains information proprietary to MACH Machine Tools Ltd and its suppliers. It may not be reproduced or disclosed to any other person or organisation without the prior written consent of MACH Machine Tools Ltd.

MISCELLANEOUS I/O

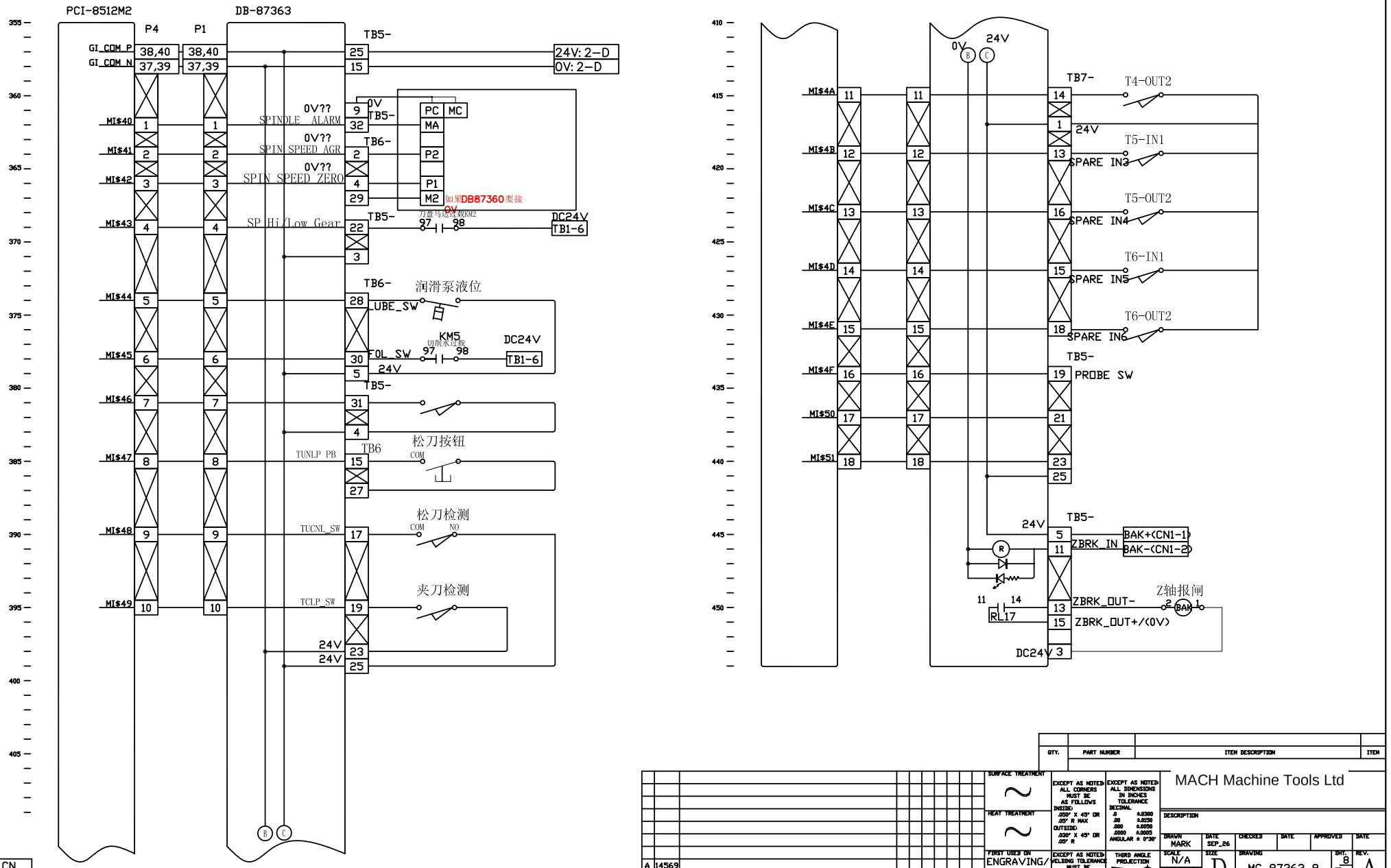

QTY.	PART NUMBER	ITEM DESCRIPTION	ITEM

REV	ECN NO.	REVISION DESCRIPTION	REV BY	DATE	CHK BY	DATE	APP BY	DATE	BY
A	14569								

SURFACE TREATMENT
HEAT TREATMENT
FIRST USED ON: ENGRAVING/MC

EXCEPT AS NOTED ALL CORNERS MUST BE AS FOLLOWS
INSIDE: .050" X 45° OR .05" R MAX
OUTSIDE: .030" X 45° OR .05" R

EXCEPT AS NOTED WELDING TOLERANCE MUST BE AS FOLLOWS ±.12

EXCEPT AS NOTED ALL DIMENSIONS IN INCHES TOLERANCE
DECIMAL .0 ±.0300; .00 ±.0150; .000 ±.0050; .0000 ±.0005; ANGULAR ± 0°30'

THIRD ANGLE PROJECTION

MACH Machine Tools Ltd

DESCRIPTION

DRAWN	DATE	CHECKED	DATE	APPROVED	DATE
MARK	SEP_26				

SCALE N/A | UNIT OF MEAS. EA | SIZE D | DRAWING MC_87363_8 | SHT. 8 OF 13 | REV. A

CN L106-4

SIZE	DRAWING	SHT.	REV.
D	MC_87363_9	9 OF 13	A

PROPRIETARY INFORMATION
This drawing contains information proprietary to MACH Machine Tools Ltd and its suppliers. It may not be reproduced or disclosed to any other person or organisation without the prior written consent of MACH Machine Tools Ltd.

MISCELLANEOUS I/O

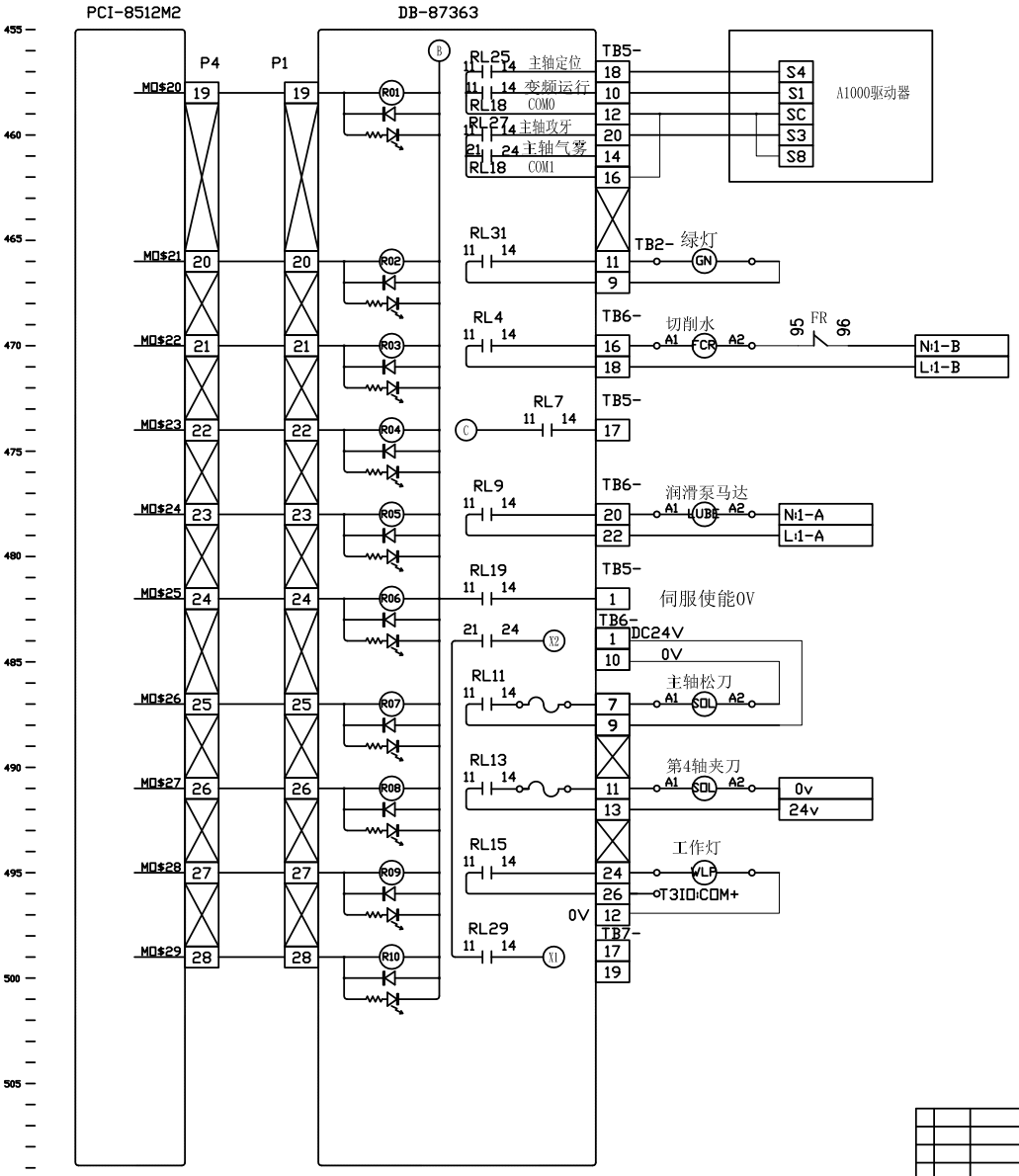

QTY.	PART NUMBER	ITEM DESCRIPTION	ITEM

REV	ECN NO.	REVISION DESCRIPTION	REV BY	DATE	CHK BY	DATE	APP BY	DATE	BY
A	14569								

SURFACE TREATMENT ~
HEAT TREATMENT ~
FIRST USED ON ENGRAVING/ MC

EXCEPT AS NOTED ALL CORNERS MUST BE AS FOLLOWS
INSIDE: .050" X 45° OR .05" R MAX
OUTSIDE: .030" X 45° OR .05" R

EXCEPT AS NOTED WELDING TOLERANCE MUST BE AS FOLLOWS ±.12

EXCEPT AS NOTED ALL DIMENSIONS IN INCHES TOLERANCE
DECIMAL .0 ±.0300; .00 ±.0150; .000 ±.0050; .0000 ±.0005; ANGULAR ± 0°30'

THIRD ANGLE PROJECTION

MACH Machine Tools Ltd

DESCRIPTION ???_8516M2??

DRAWN	DATE	CHECKED	DATE	APPROVED	DATE
Mark	SEP_26				

SCALE	SIZE	DRAWING	SHT.	REV.
N/A	D	MC_87363_9	9 OF 13	A

UNIT OF MEAS. EA

CN L106-4

MDS 700-4T / 900-4T · Wiring Schematics Node-1000 + DB87360 CE
MACH MACHINE TOOLS

SIZE	DRAWING	SHT.	REV.
D	MC_87363_10	10 OF 13	A

PROPRIETARY INFORMATION
This drawing contains information proprietary to MACH Machine Tools Ltd and its suppliers. It may not be reproduced or disclosed to any other person or organisation without the prior written consent of MACH Machine Tools Ltd.

MISCELLANEOUS I/O

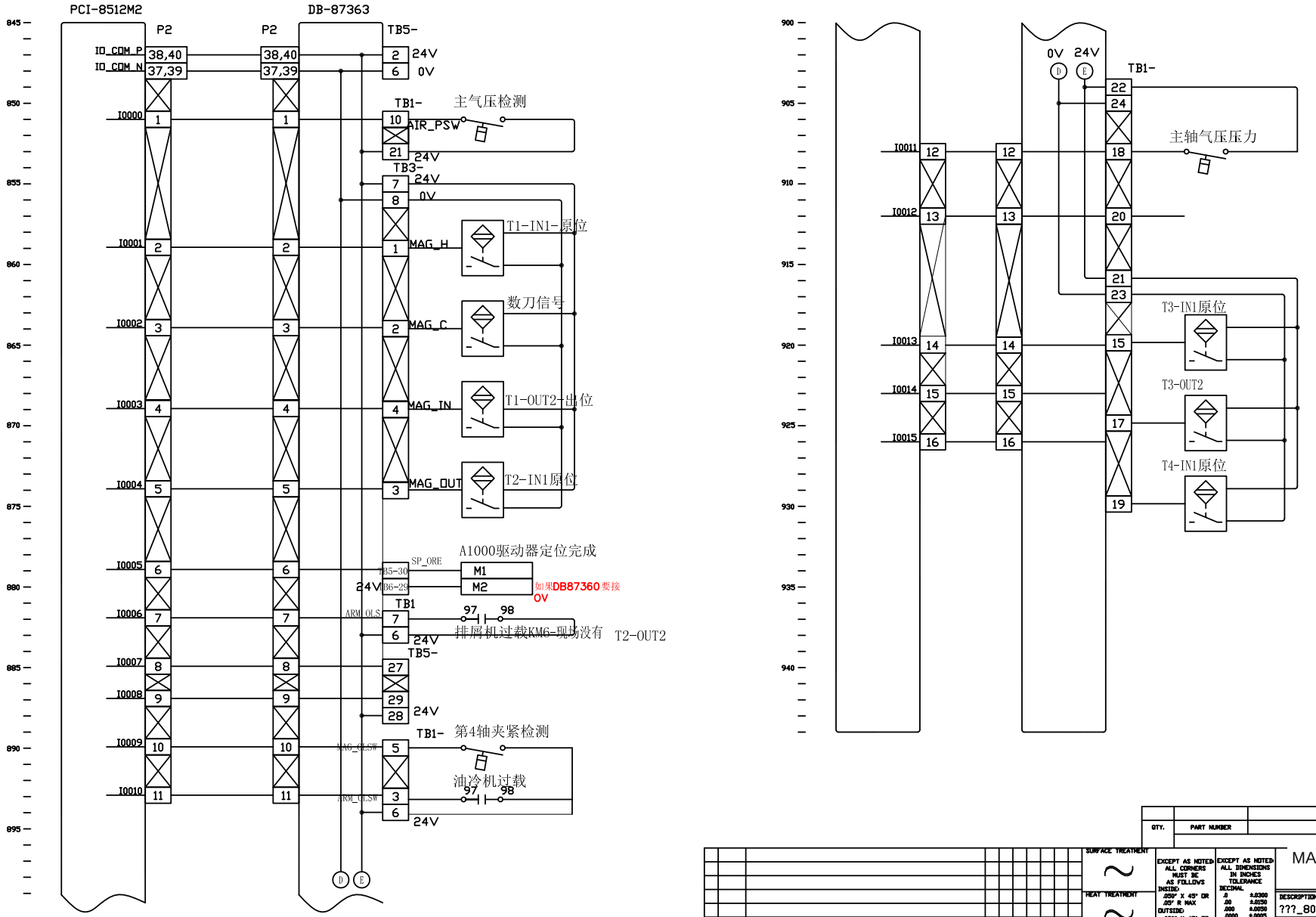

QTY.	PART NUMBER	ITEM DESCRIPTION	ITEM

REV	ECN NO.	REVISION DESCRIPTION	REV BY	DATE	CHK BY	DATE	APP BY	DATE	BY
A	14569								

SURFACE TREATMENT ~
HEAT TREATMENT ~
FIRST USED ON ENGRAVING/MC

EXCEPT AS NOTED ALL CORNERS MUST BE AS FOLLOWS
INSIDE: .050" X 45° OR .05" R MAX
OUTSIDE: .030" X 45° OR .05" R

EXCEPT AS NOTED WELDING TOLERANCE MUST BE AS FOLLOWS ±.12

EXCEPT AS NOTED ALL DIMENSIONS IN INCHES TOLERANCE
DECIMAL
.0 ±.0300
.00 ±.0150
.000 ±.0050
.0000 ±.0005
ANGULAR ± 0°30'

THIRD ANGLE PROJECTION

MACH Machine Tools Ltd

DESCRIPTION ???_8064??

DRAWN	DATE	CHECKED	DATE	APPROVED	DATE
MARK	SEP_26				

SCALE	SIZE	DRAWING	SHT.	REV.
N/A	D	MC_87363_10	10 OF 13	A

UNIT OF MEAS. EA

CN L106-4

MDS 700-4T / 900-4T · Wiring Schematics Node-1000 + DB87360 CE
MACH MACHINE TOOLS

SIZE	DRAWING	SHT.	REV.
D	MC_87363_12	12 OF 13	A

PROPRIETARY INFORMATION
This drawing contains information proprietary to MACH Machine Tools Ltd and its suppliers. It may not be reproduced or disclosed to any other person or organisation without the prior written consent of MACH Machine Tools Ltd.

MISCELLANEOUS I/O

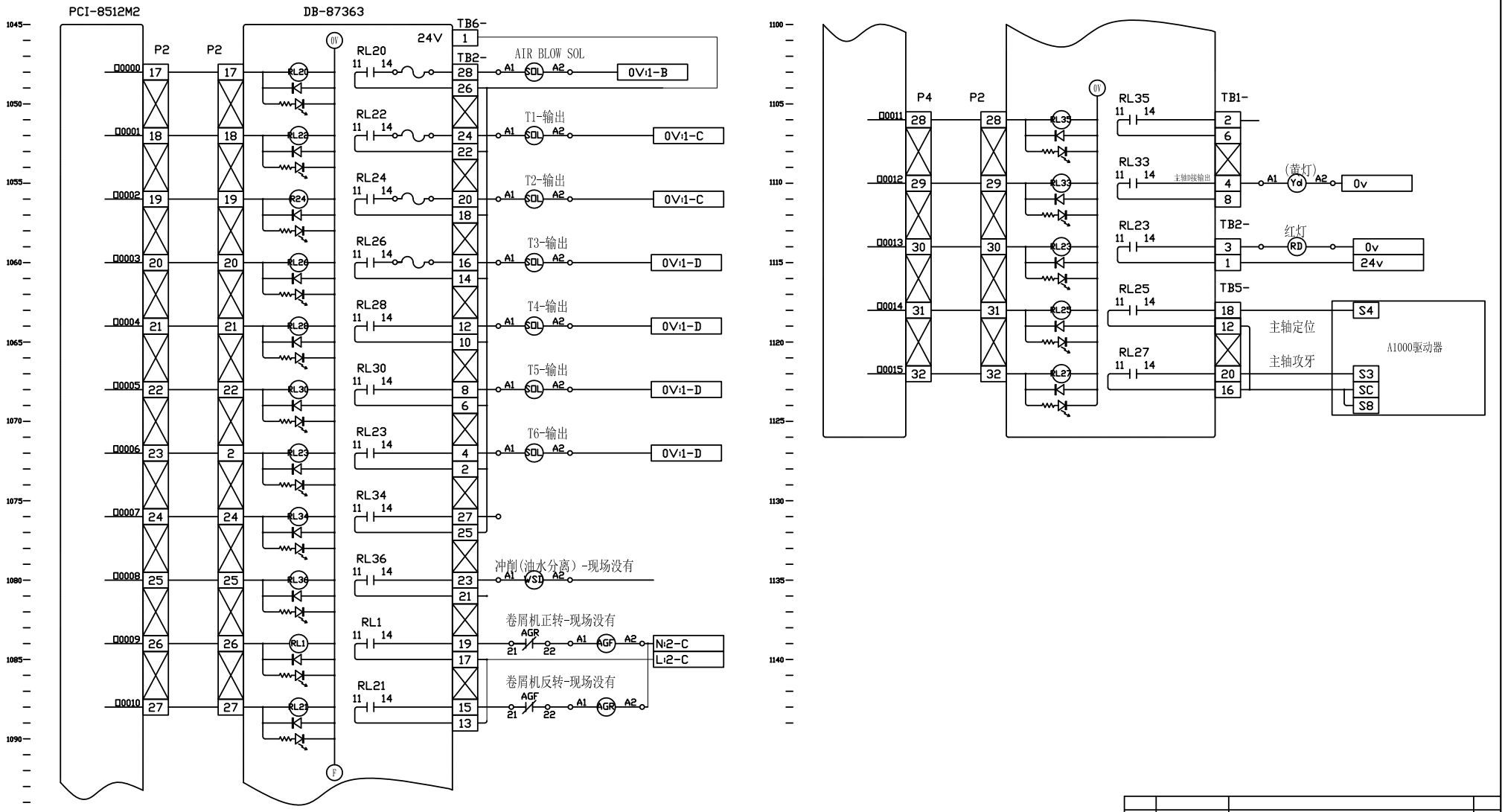

QTY.	PART NUMBER	ITEM DESCRIPTION	ITEM

REV	ECN NO.	REVISION DESCRIPTION	REV BY	DATE	CHK BY	DATE	APP BY	DATE	DF
A	14569								

SURFACE TREATMENT ~
HEAT TREATMENT ~
FIRST USED ON ENGRAVING/MC

EXCEPT AS NOTED ALL CORNERS MUST BE AS FOLLOWS
INSIDE: .050" X 45° OR .05" R MAX
OUTSIDE: .030" X 45° OR .05" R

EXCEPT AS NOTED WELDING TOLERANCE MUST BE AS FOLLOWS ±.12

EXCEPT AS NOTED ALL DIMENSIONS IN INCHES TOLERANCE
DECIMAL
.0 ±.0300
.00 ±.0150
.000 ±.0050
.0000 ±.0005
ANGULAR ± 0°30'

THIRD ANGLE PROJECTION

MACH Machine Tools Ltd

DESCRIPTION

DRAWN	DATE	CHECKED	DATE	APPROVED	DATE
MARK	SEP_26				

SCALE	SIZE	DRAWING	SHT.	REV.
N/A	D	MC_87363_12	11 OF 13	A

UNIT OF MEAS. EA

CN L106-4

MDS 700-4T / 900-4T · Wiring Schematics Node-1000 + DB87360 CE

MACH MACHINE TOOLS

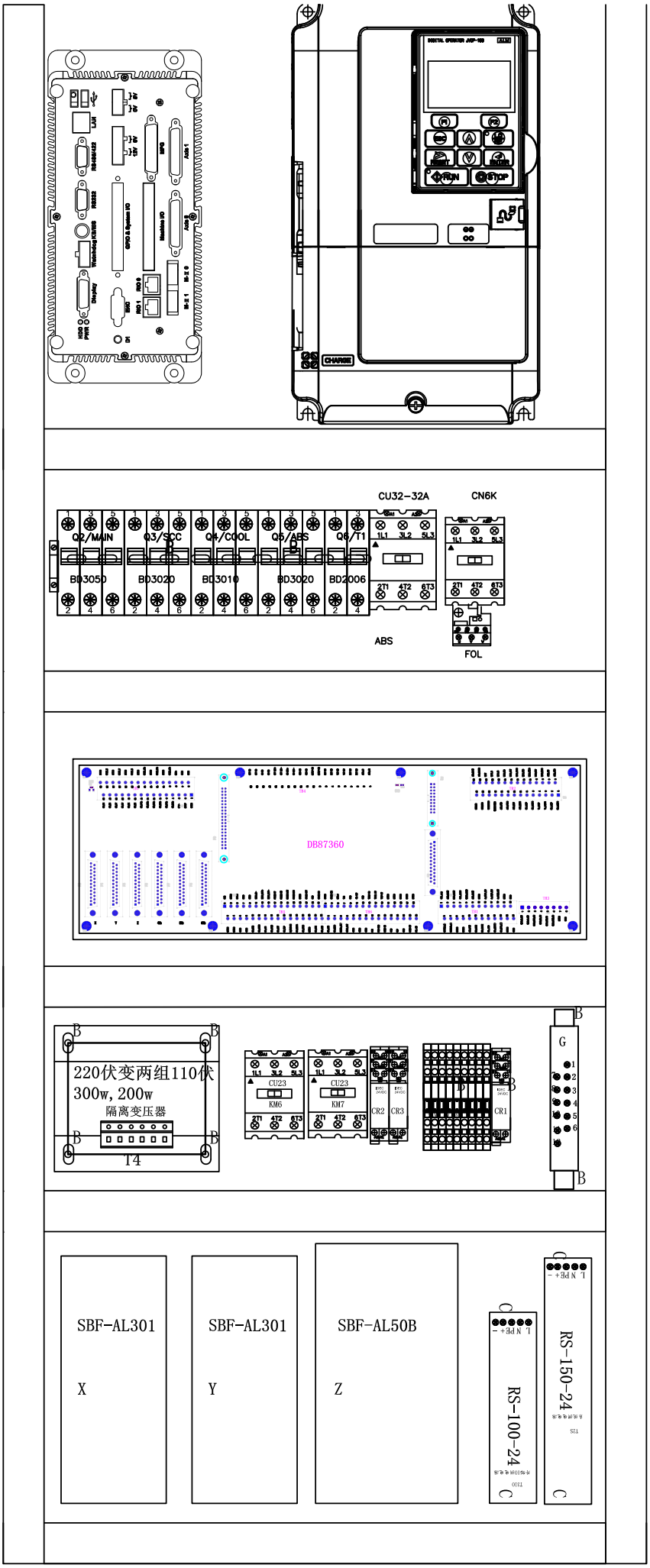
CU32-32A
CN6K
Q2/MAIN
Q3/SCC
Q4/COOL
Q5/ABS
Q6/T1
BD3050
BD3020
BD3010
BD3020
BD2006
ABS
FOL
DB87360
220伏变两组110伏
300w, 200w
隔离变压器
14
CU23
KM6
KM7
CR2
CR3
CR1
G
SBF-AL301
X
SBF-AL301
Y
SBF-AL50B
Z
RS-100-24
RS-150-24

MACH
MACHINE TOOLS

PRECISION MACHINE TOOLS · SALES · SERVICE · SUPPORT

UK & EUROPE

European Head Office

Units 1–3 Chapel Lane,
Clay Hill, Fishponds,
Bristol BS5 7EY,
United Kingdom

T +44 (0) 117 965 2706
E info@machmt.co.uk

NORTH AMERICA

US Office

200 Republic Ave,
Joliet, IL 60435,
USA

T +1 313 489 9667
E sales@machmt.com

ASIA

Asia Office

1 F.-A1, No. 50-26,
Shanzhuhu Rd,
Qionglin Township,
Hsinchu County,
Taiwan 307005

E sales@machmt.com

www.machmt.com

© MACH Machine Tools. Specifications subject to change without notice.