MACH MACHINE TOOLS

www.machmt.com

WIRING SCHEMATICS

MDS 700-4T / 900-4T

CNC Knee Mill with Tool Changer

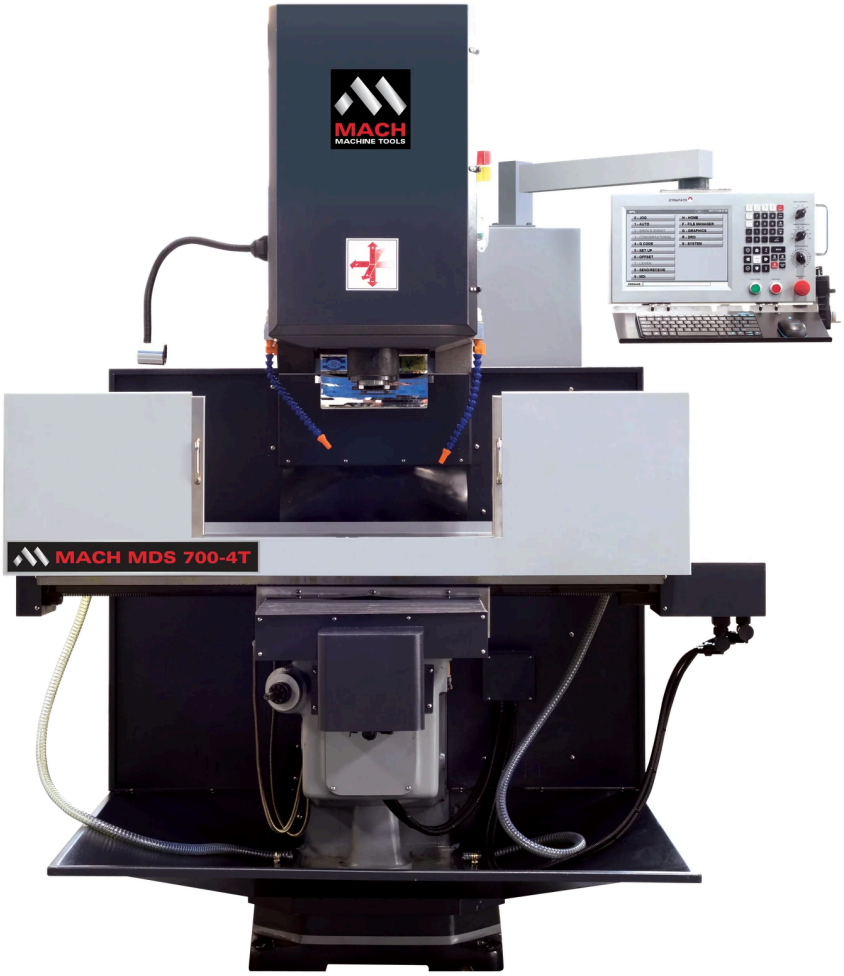

Wiring Schematics
Compact-355 + ECAT3512 CE

Screw Size	Tightening Torque(N.m)
M4	1.2~1.5
M5	2.0~2.5
M6	5.4~6.0
M8	9.9~11.0
M10	18~23
M12	32~40

APPROVED	CHECKED	DRAWN			Title		
		Mark	MACH Machine Tools Ltd		ELECTRICAL DRAWING – TIGHTENING TORQUE TABLE		
			Edit A	Page 2/2	NO CNC MILL MACHINE	Model MDS 700/900-4T	DWG NO. LV845_3512_CE0.1

AUTOCAD FILE	PAGE NUMBER	DESCRIPTION	AUTOCAD FILE	PAGE NUMBER	DESCRIPTION
LV845_3512_CE1	1	MAIN CIRCUIT(220V)	LV845_3512_CE15	21	CONTROL CIRCUIT
LV845_3512_CE1.1	2	MAIN CIRCUIT(380/415V)	LV845_3512_CE16	22	CONTROL CIRCUIT
LV845_3512_CE2	3	INVERTER	LV845_3512_CE17	23	CONTROL CIRCUIT
LV845_3512_CE2.1	4	INVERTER	LV845_3512_CE18	24	CONTROL CIRCUIT
LV845_3512_CE2.2	5	INVERTER	LV845_3512_CE19	25	CONTROL CIRCUIT
LV845_3512_CE3	6	X SERVO DRIVER	LV845_3512_CE20	26	CONTROL CIRCUIT
LV845_3512_CE4	7	Y SERVO DRIVER	LV845_3512_CE21	27	CONTROL CIRCUIT
LV845_3512_CE5	8	Z SERVO DRIVER	LV845_3512_CE22	28	CONTROL CIRCUIT
LV845_3512_CE6	9	SUB POWER	LV845_3512_CE23	29	CONTROL CIRCUIT
LV845_3512_CE6.1	10	SUB POWER	LV845_3512_CE24	30	CONTROL CIRCUIT
LV845_3512_CE6.2	11	SUB POWER	LV845_3512_CE25	31	CONTROL CIRCUIT
LV845_3512_CE7	12	SUB POWER	LV845_3512_CE26	32	ESTOP STRING FOR CNC
LV845_3512_CE8	13	CONTROL CIRCUIT	LV845_3512_CE26.1	33	ESTOP STRING FOR CNC(none CE)
LV845_3512_CE8.1	14	CONTROL CIRCUIT	LV845_3512_CE27	1	SYSTEM BLOCK
LV845_3512_CE9	15	CONTROL CIRCUIT			
LV845_3512_CE10	16	CONTROL CIRCUIT			
LV845_3512_CE11	17	CONTROL CIRCUIT			
LV845_3512_CE12	18	CONTROL CIRCUIT			
LV845_3512_CE13	19	CONTROL CIRCUIT			
LV845_3512_CE14	20	CONTROL CIRCUIT			

APPROVED	CHECKED	DRAWN			Title		
		Mark	MACH Machine Tools Ltd		ELECTRICAL DRAWING – CONTENT		
			Edit A	Page 1/2	NO CNC MILL MACHINE	Model MDS 700/900-4T	DWG NO. LV845_3512_CE0

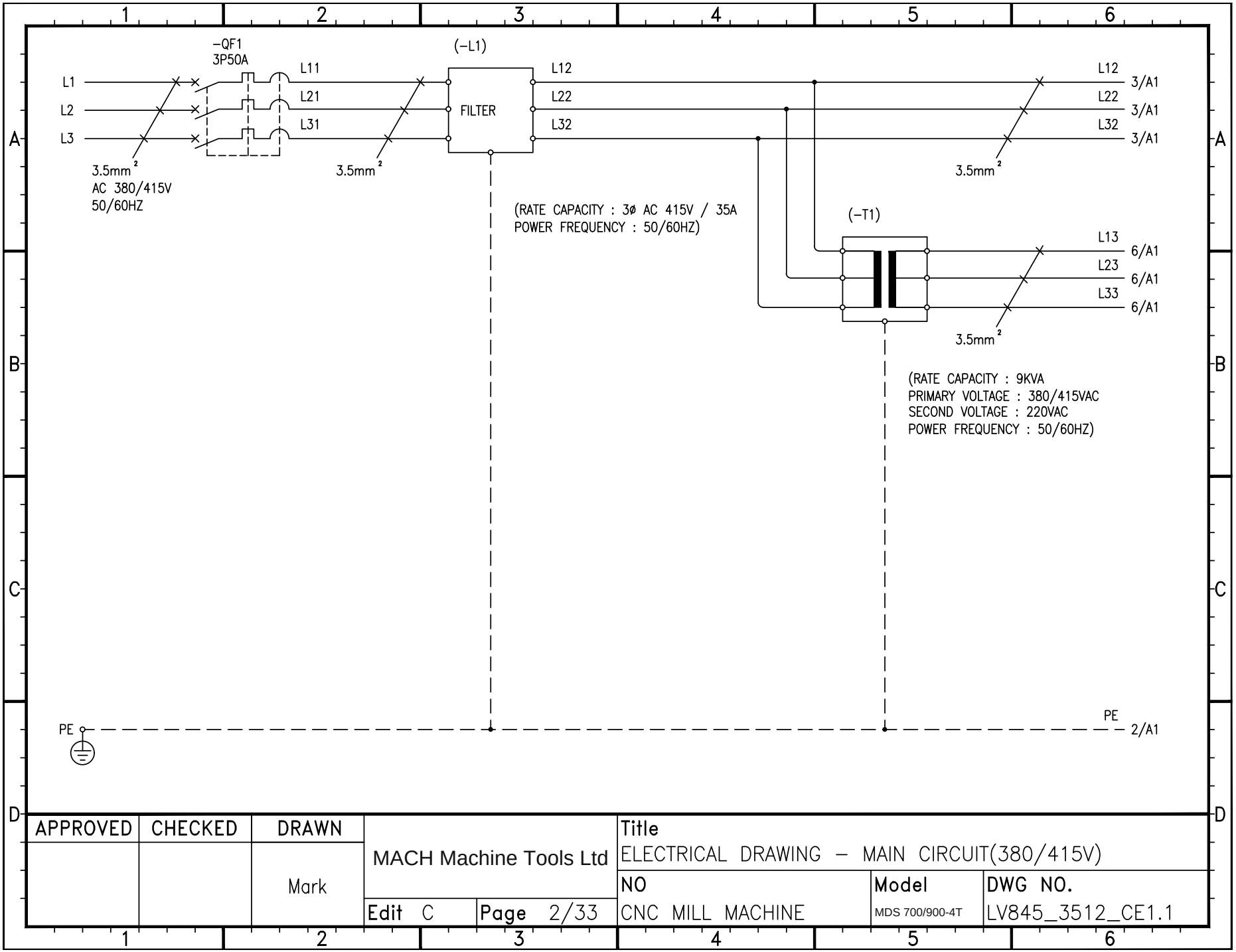
-QF1
3P50A
(-L1)
L1
L2
L3
L11
L21
L31
FILTER
L12
L22
L32
3/A1
3.5mm²
AC 380/415V
50/60HZ
(RATE CAPACITY : 3ø AC 415V / 35A
POWER FREQUENCY : 50/60HZ)
(-T1)
L13
L23
L33
6/A1
(RATE CAPACITY : 9KVA
PRIMARY VOLTAGE : 380/415VAC
SECOND VOLTAGE : 220VAC
POWER FREQUENCY : 50/60HZ)
PE
2/A1
APPROVED
CHECKED
DRAWN
Mark
MACH Machine Tools Ltd
Edit C
Page 2/33
Title
ELECTRICAL DRAWING – MAIN CIRCUIT(380/415V)
NO
CNC MILL MACHINE
Model
MDS 700/900-4T
DWG NO.
LV845_3512_CE1.1

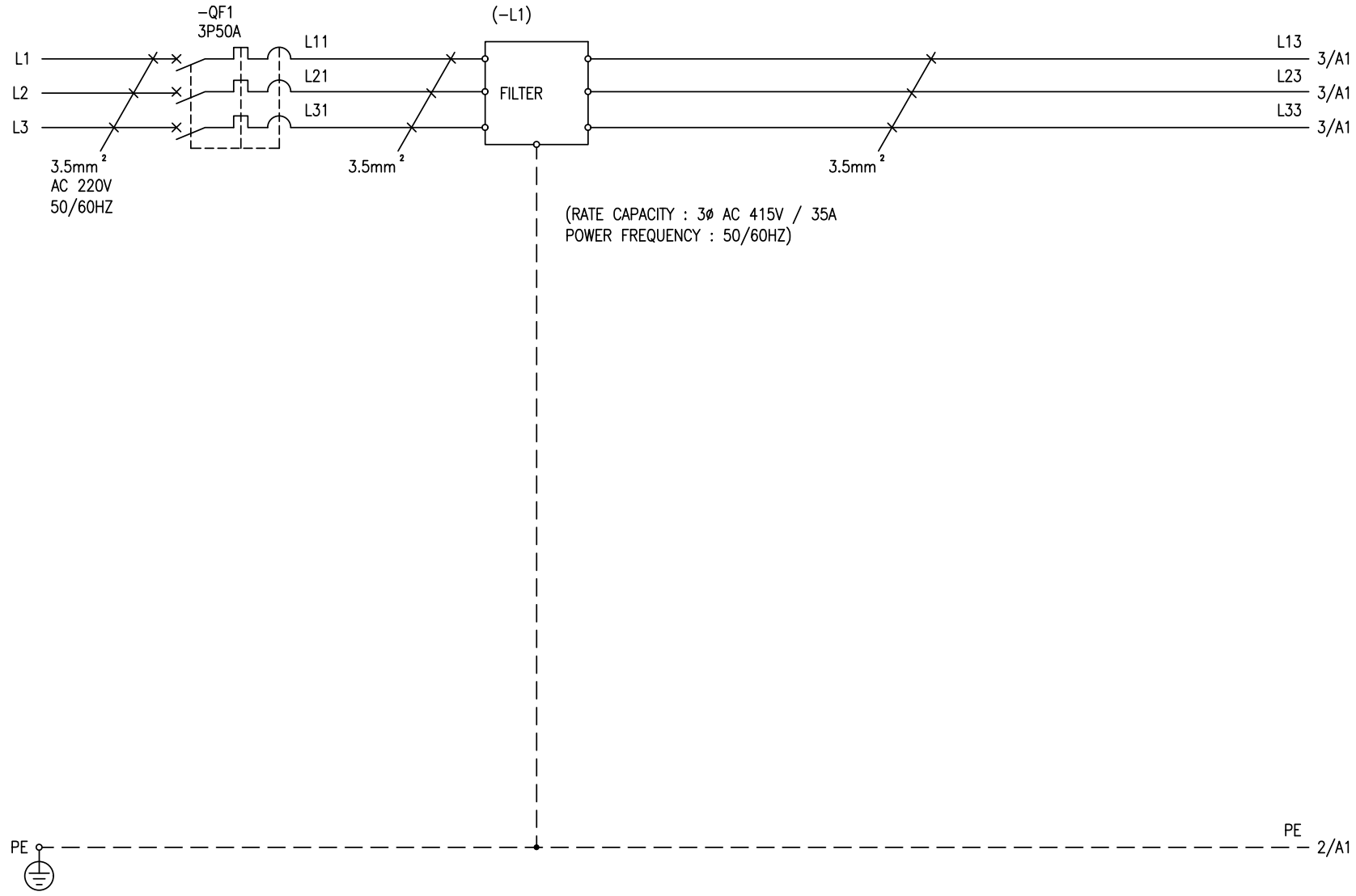

APPROVED	CHECKED	DRAWN		Title		
		Mark	MACH Machine Tools Ltd	ELECTRICAL DRAWING – MAIN CIRCUI(220V)		
			Edit C / Page 1/33	NO CNC MILL MACHINE	Model MDS 700/900-4T	DWG NO. LV845_3512_CE1

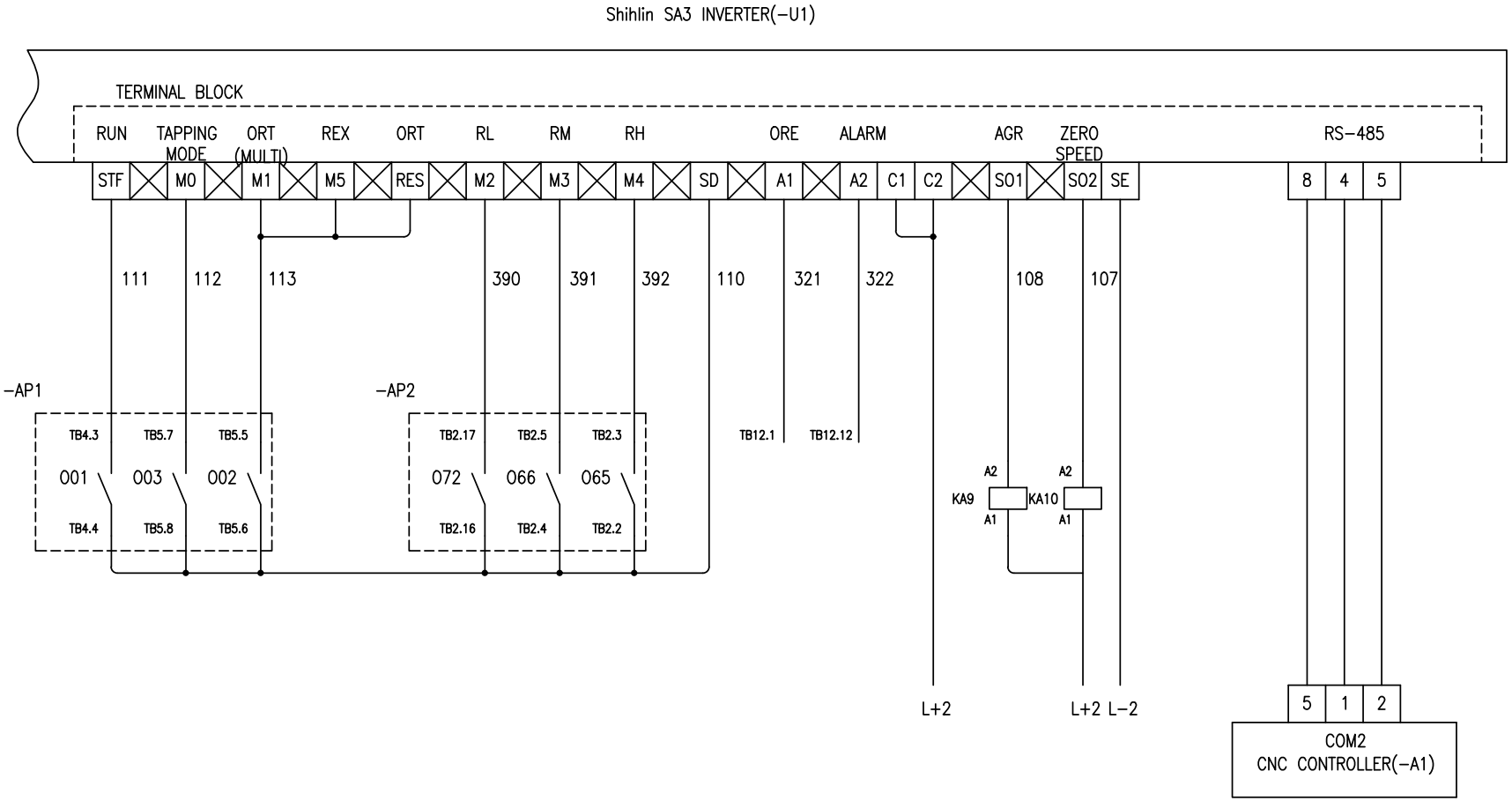

APPROVED	CHECKED	DRAWN		Title
		Mark	MACH Machine Tools Ltd	ELECTRICAL DRAWING – MAIN CIRCUIT
			Edit C / Page 4/33	NO: CNC MILL MACHINE / Model: MDS 700/900-4T / DWG NO.: LV845_3512_CE2.1

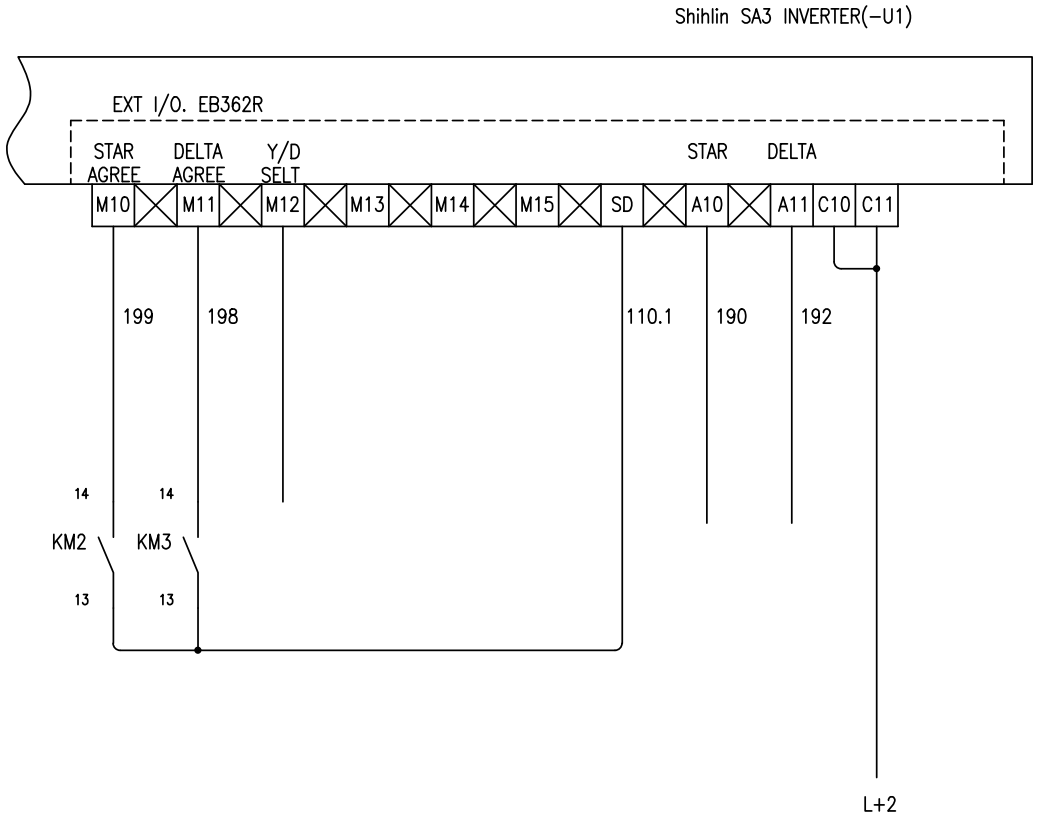

APPROVED	CHECKED	DRAWN		Title		
		Mark	MACH Machine Tools Ltd	ELECTRICAL DRAWING – MAIN CIRCUIT		
				NO	Model	DWG NO.
			Edit C / Page 5/33	CNC MILL MACHINE	MDS 700/900-4T	LV845_3512_CE2.2

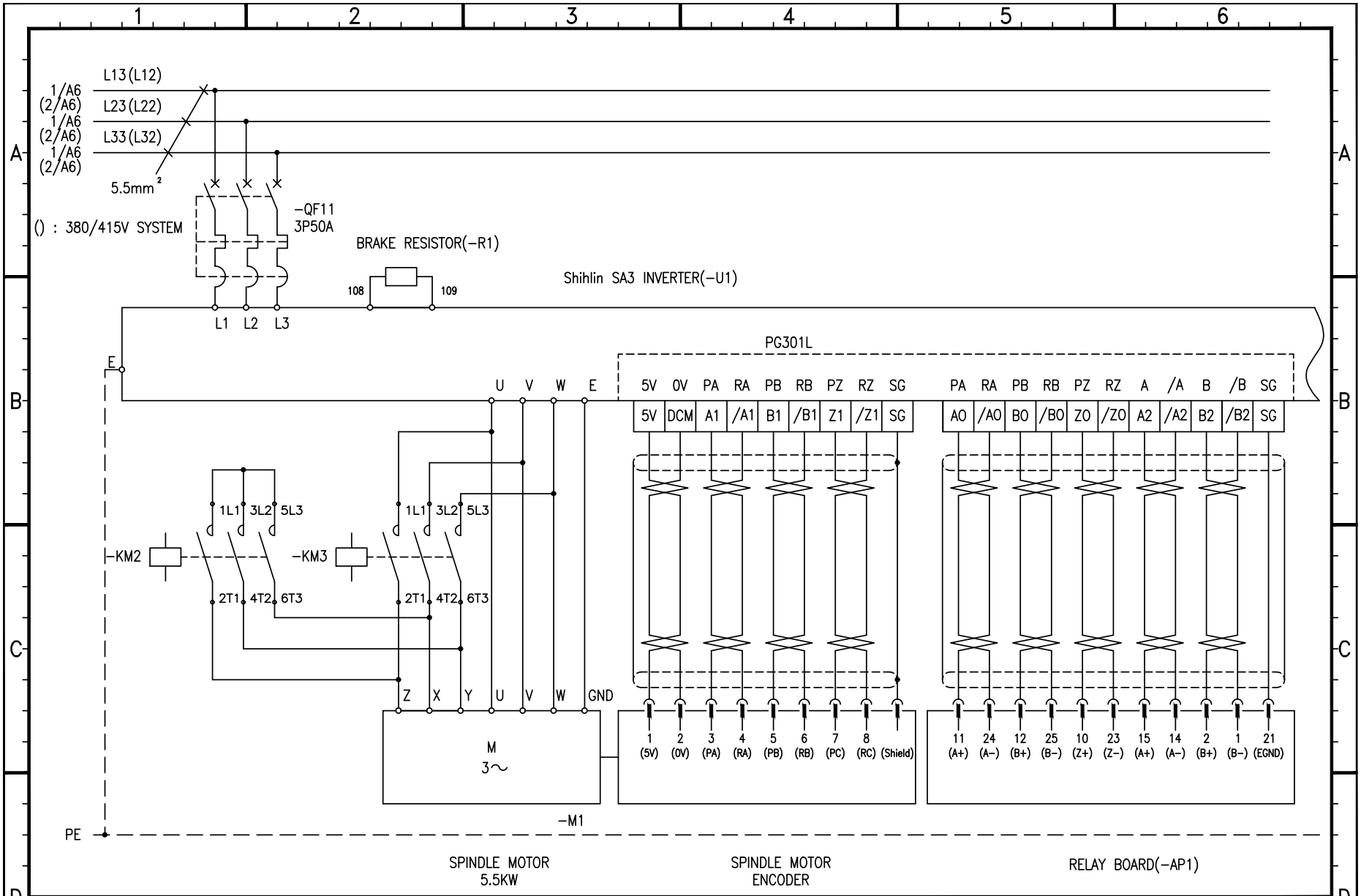

APPROVED	CHECKED	DRAWN		Title
		Mark	MACH Machine Tools Ltd	ELECTRICAL DRAWING – MAIN CIRCUIT
			Edit C / Page 3/33	NO: CNC MILL MACHINE / Model: MDS 700/900-4T / DWG NO.: LV845_3512_CE2

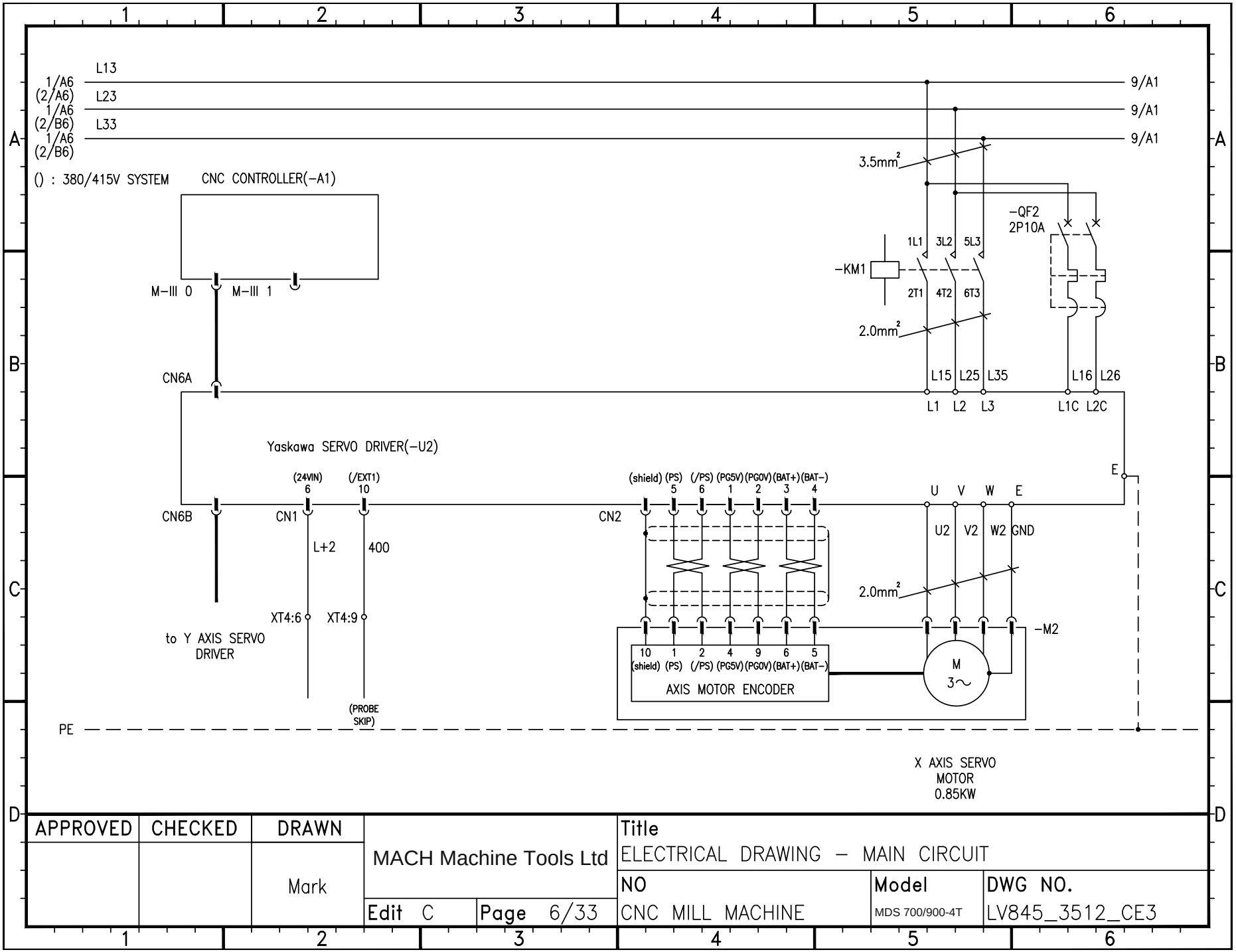

APPROVED	CHECKED	DRAWN	MACH Machine Tools Ltd	Title ELECTRICAL DRAWING – MAIN CIRCUIT		
		Mark		NO	Model	DWG NO.
			Edit C / Page 6/33	CNC MILL MACHINE	MDS 700/900-4T	LV845_3512_CE3

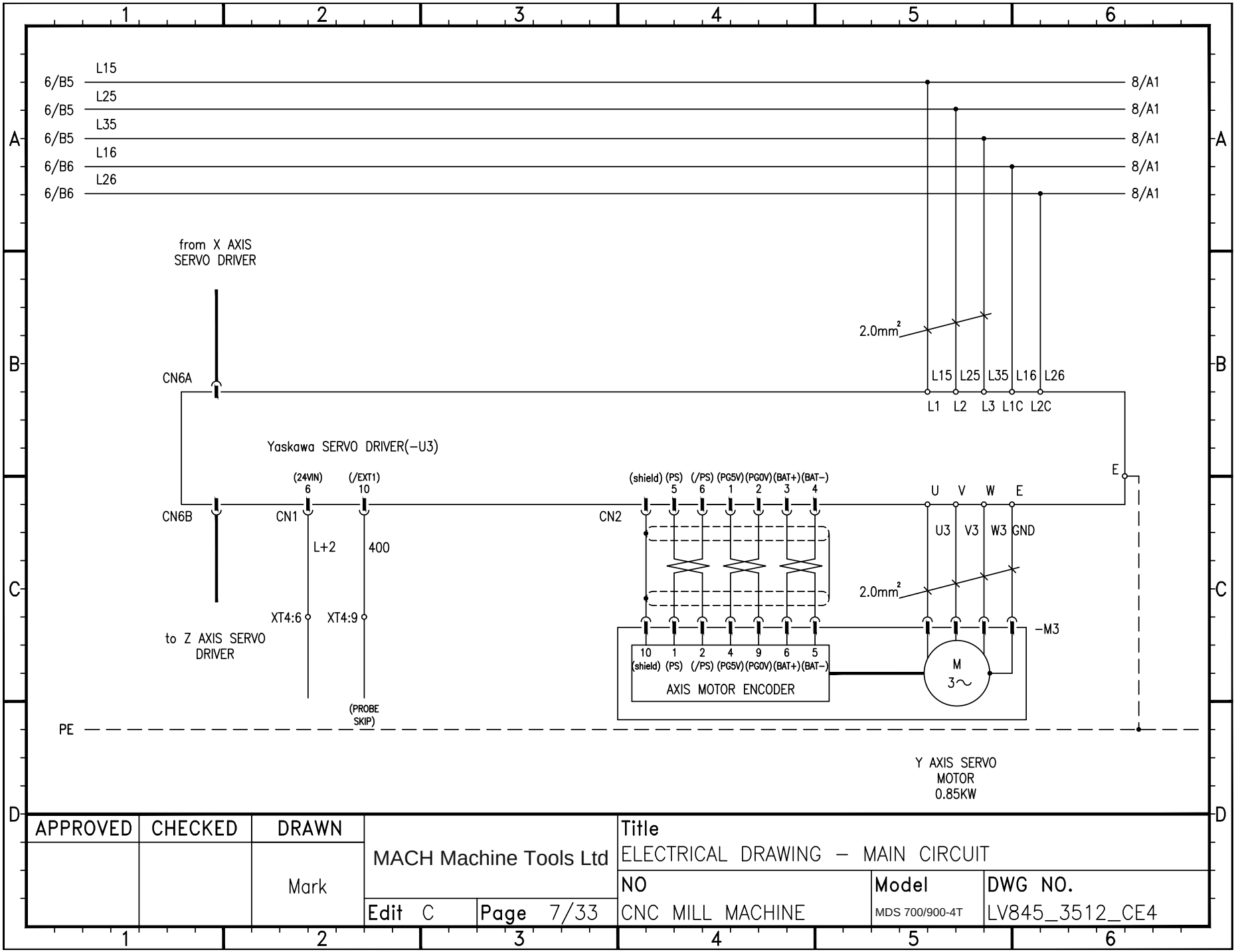

APPROVED	CHECKED	DRAWN		Title
		Mark	MACH Machine Tools Ltd	ELECTRICAL DRAWING – MAIN CIRCUIT
			Edit C / Page 7/33	NO: CNC MILL MACHINE / Model: MDS 700/900-4T / DWG NO.: LV845_3512_CE4

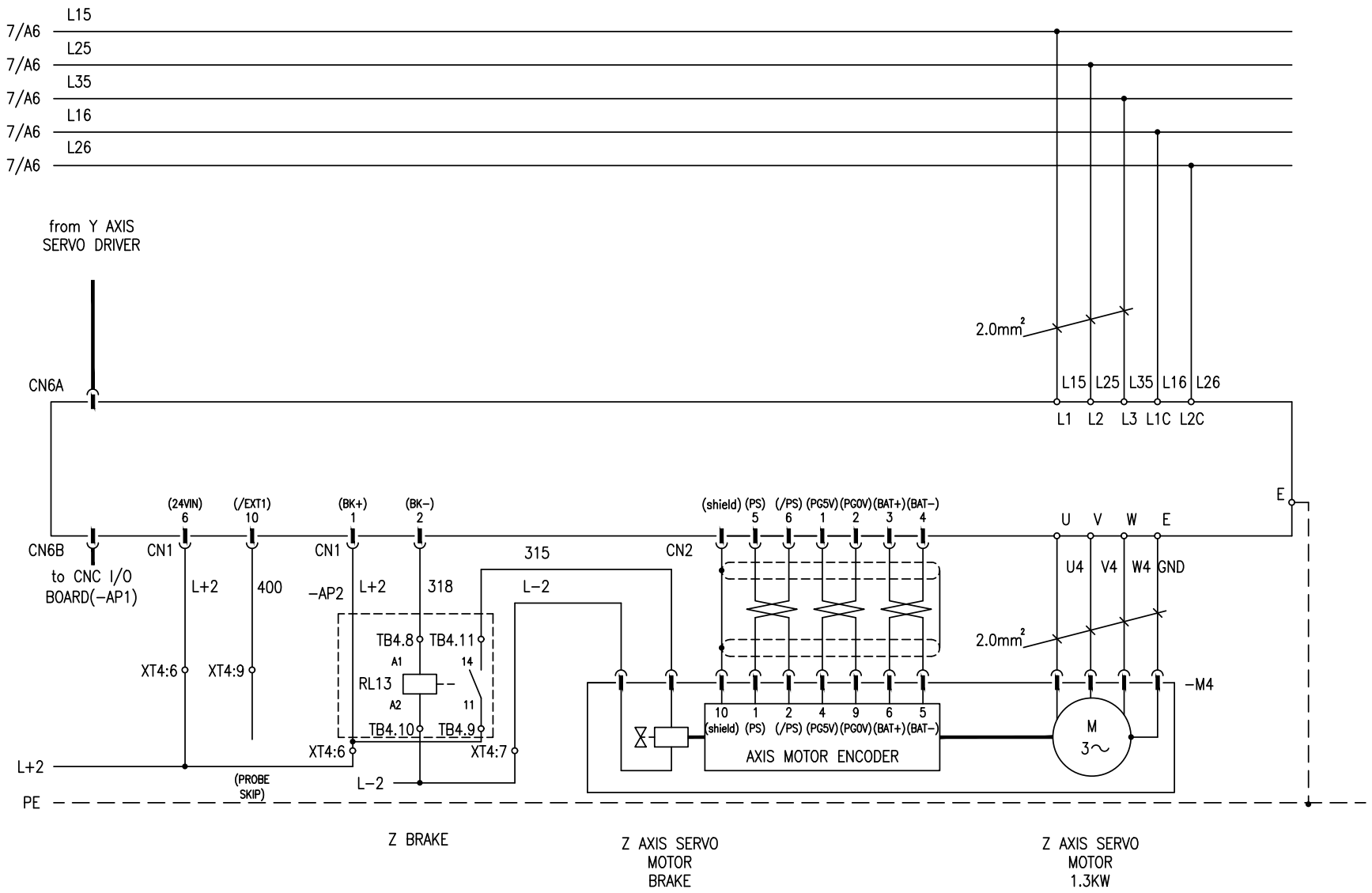

APPROVED	CHECKED	DRAWN		Title		
		Mark	MACH Machine Tools Ltd	ELECTRICAL DRAWING – MAIN CIRCUIT		
			Edit C / Page 8/33	NO: CNC MILL MACHINE	Model: MDS 700/900-4T	DWG NO.: LV845_3512_CE5

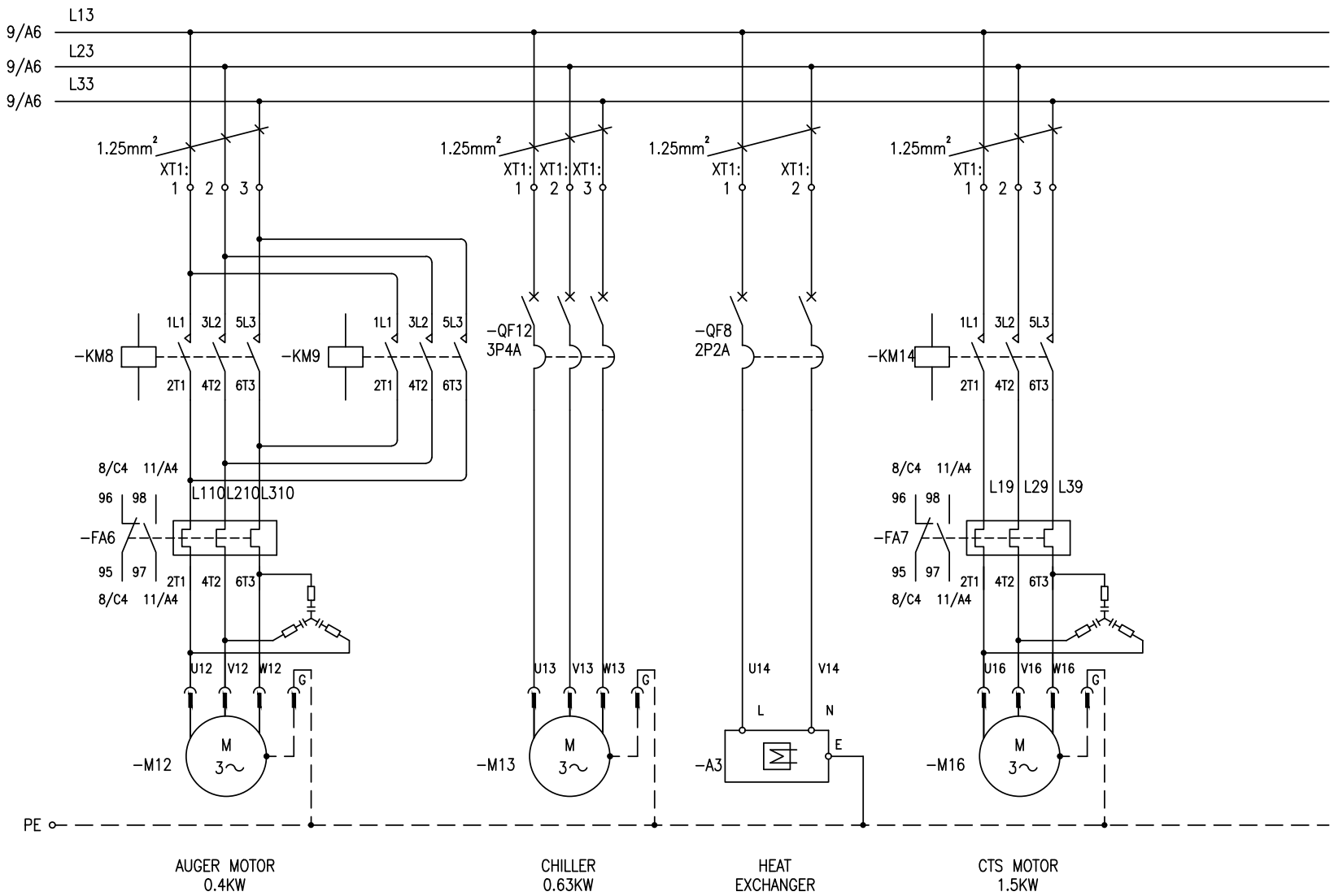

APPROVED	CHECKED	DRAWN		Title		
		Mark	MACH Machine Tools Ltd	ELECTRICAL DRAWING – CONTROL CIRCUIT		
			Edit C / Page 10/33	NO: CNC MILL MACHINE	Model: MDS 700/900-4T	DWG NO.: LV845_3512_CE6.1

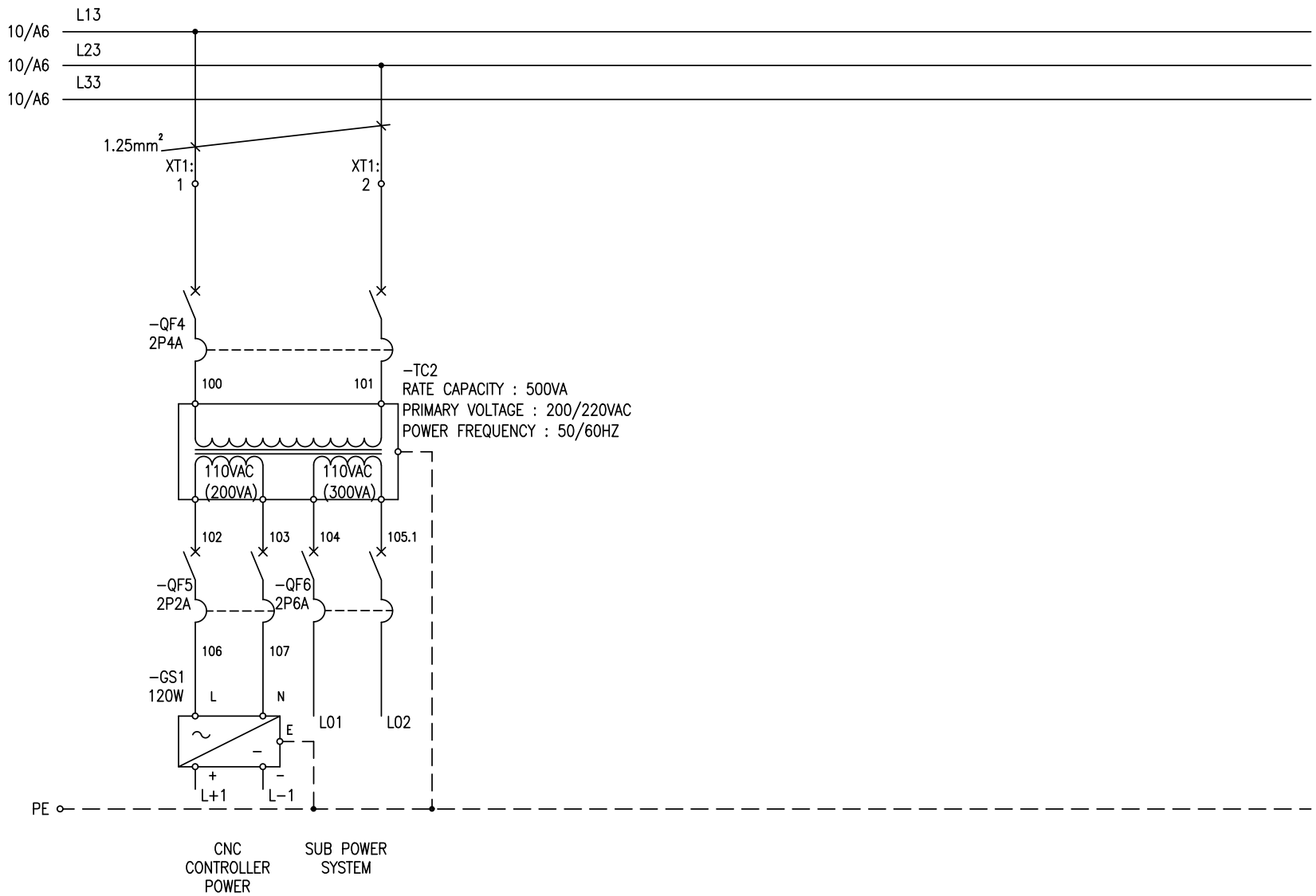

APPROVED	CHECKED	DRAWN		Title
		Mark	MACH Machine Tools Ltd	ELECTRICAL DRAWING – CONTROL CIRCUIT
			Edit C / Page 11/33	NO: CNC MILL MACHINE; Model: MDS 700/900-4T; DWG NO.: LV845_3512_CE6.2

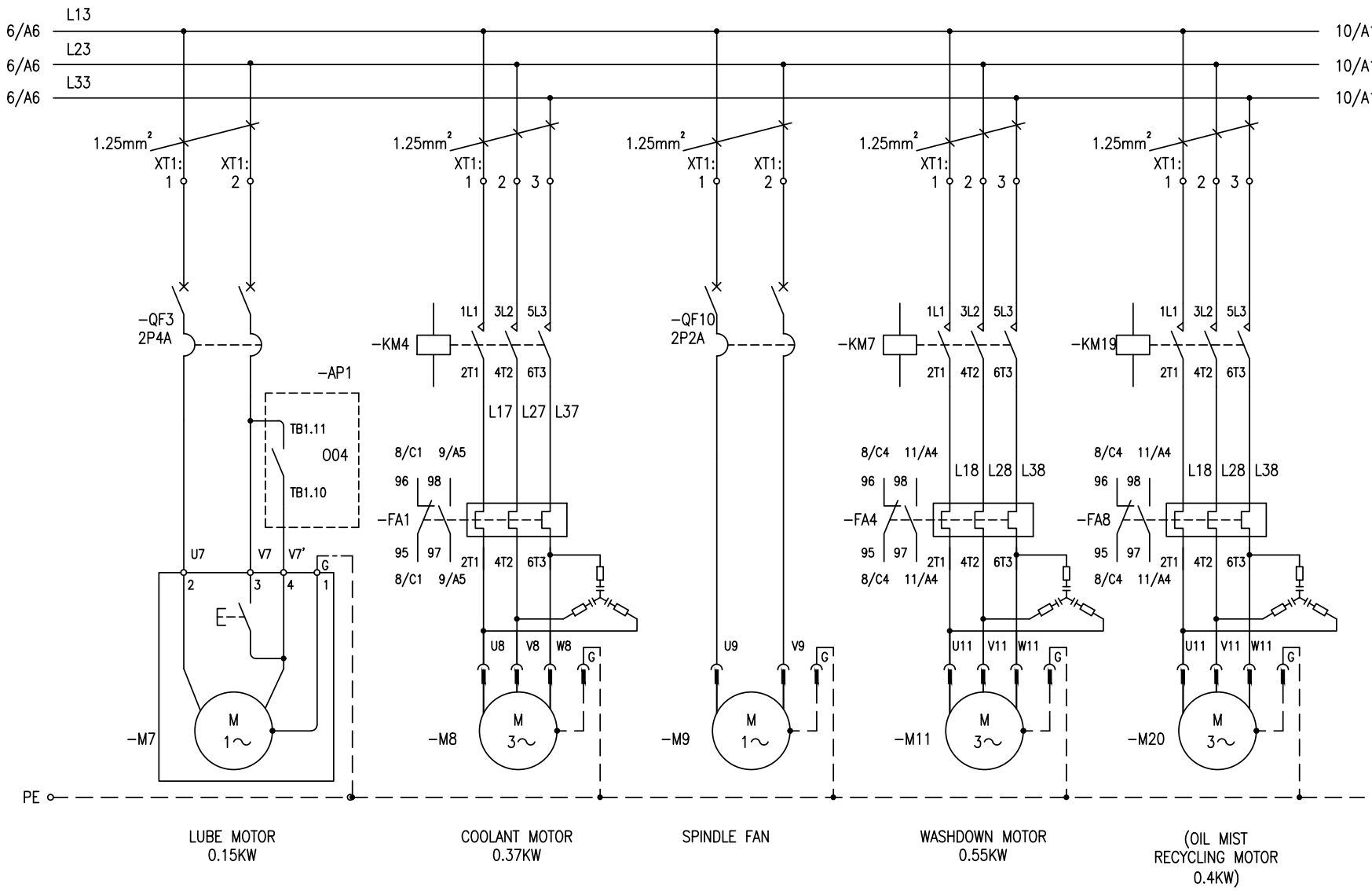

APPROVED	CHECKED	DRAWN		Title		
		Mark	MACH Machine Tools Ltd	ELECTRICAL DRAWING – CONTROL CIRCUIT		
			Edit C / Page 9/33	NO CNC MILL MACHINE	Model MDS 700/900-4T	DWG NO. LV845_3512_CE6

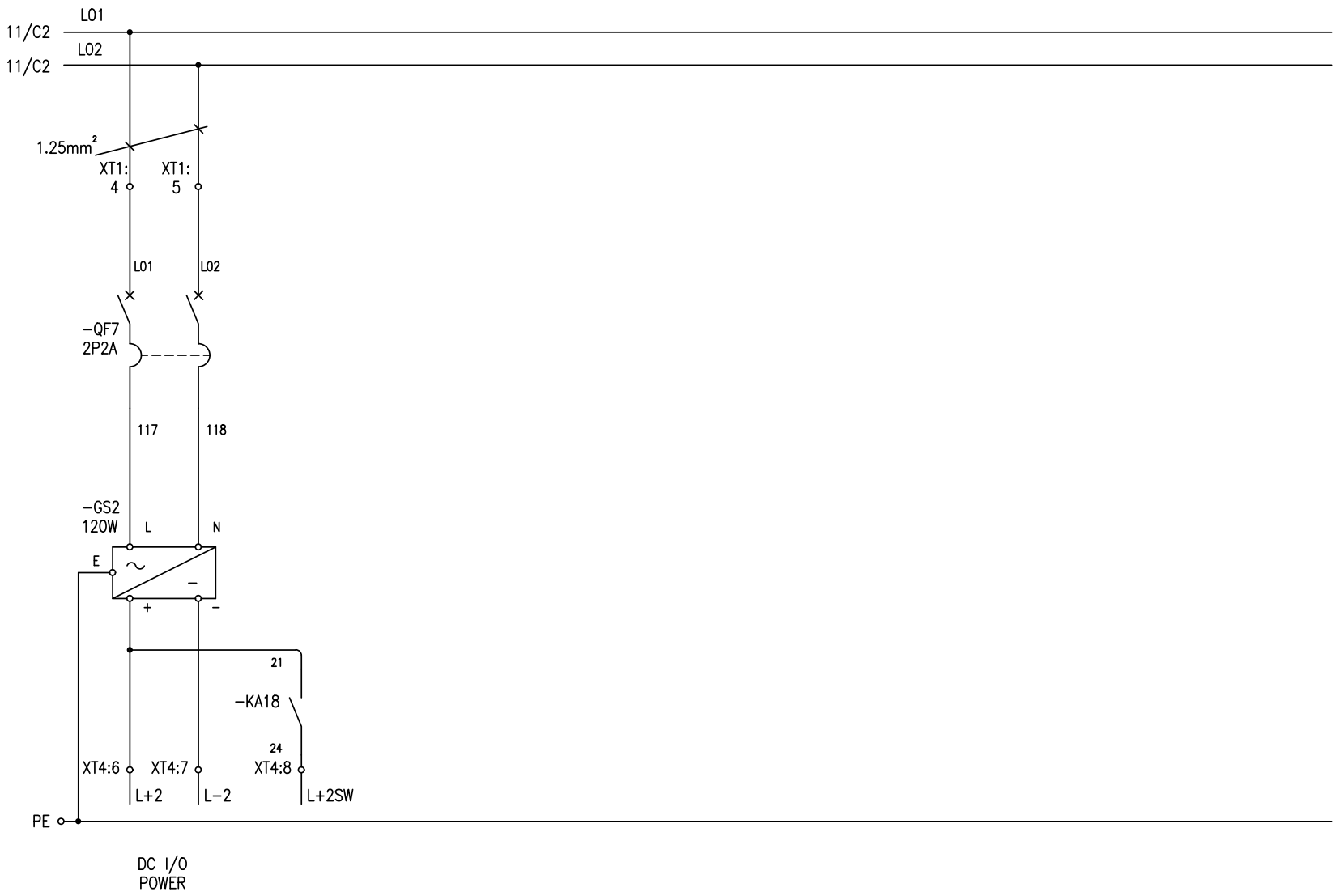

APPROVED	CHECKED	DRAWN		Title		
		Mark	MACH Machine Tools Ltd	ELECTRICAL DRAWING – CONTROL CIRCUIT		
				NO	Model	DWG NO.
			Edit C / Page 12/33	CNC MILL MACHINE	MDS 700/900-4T	LV845_3512_CE7

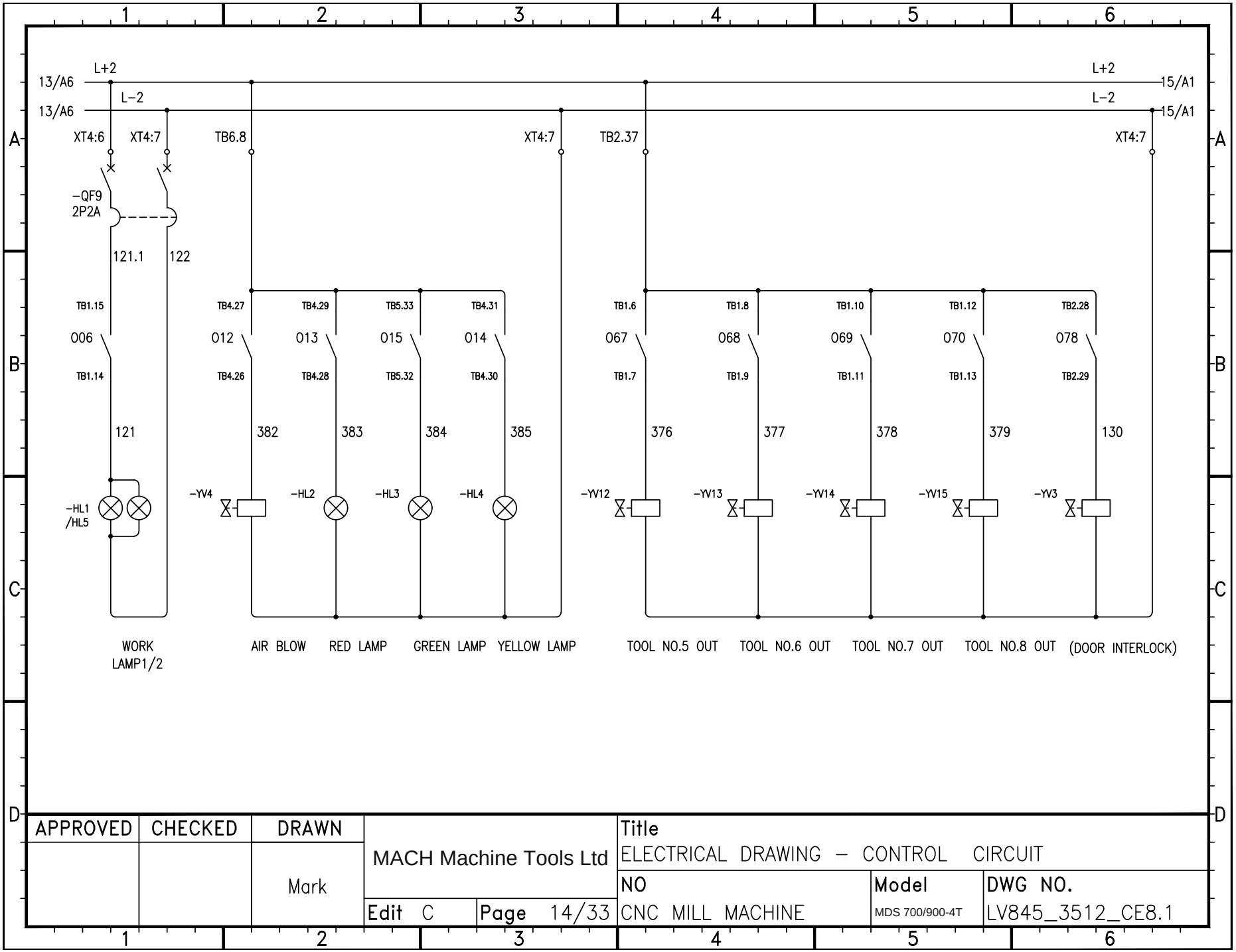

APPROVED	CHECKED	DRAWN		Title
		Mark	MACH Machine Tools Ltd	ELECTRICAL DRAWING – CONTROL CIRCUIT
			Edit C / Page 14/33	NO: CNC MILL MACHINE; Model: MDS 700/900-4T; DWG NO.: LV845_3512_CE8.1

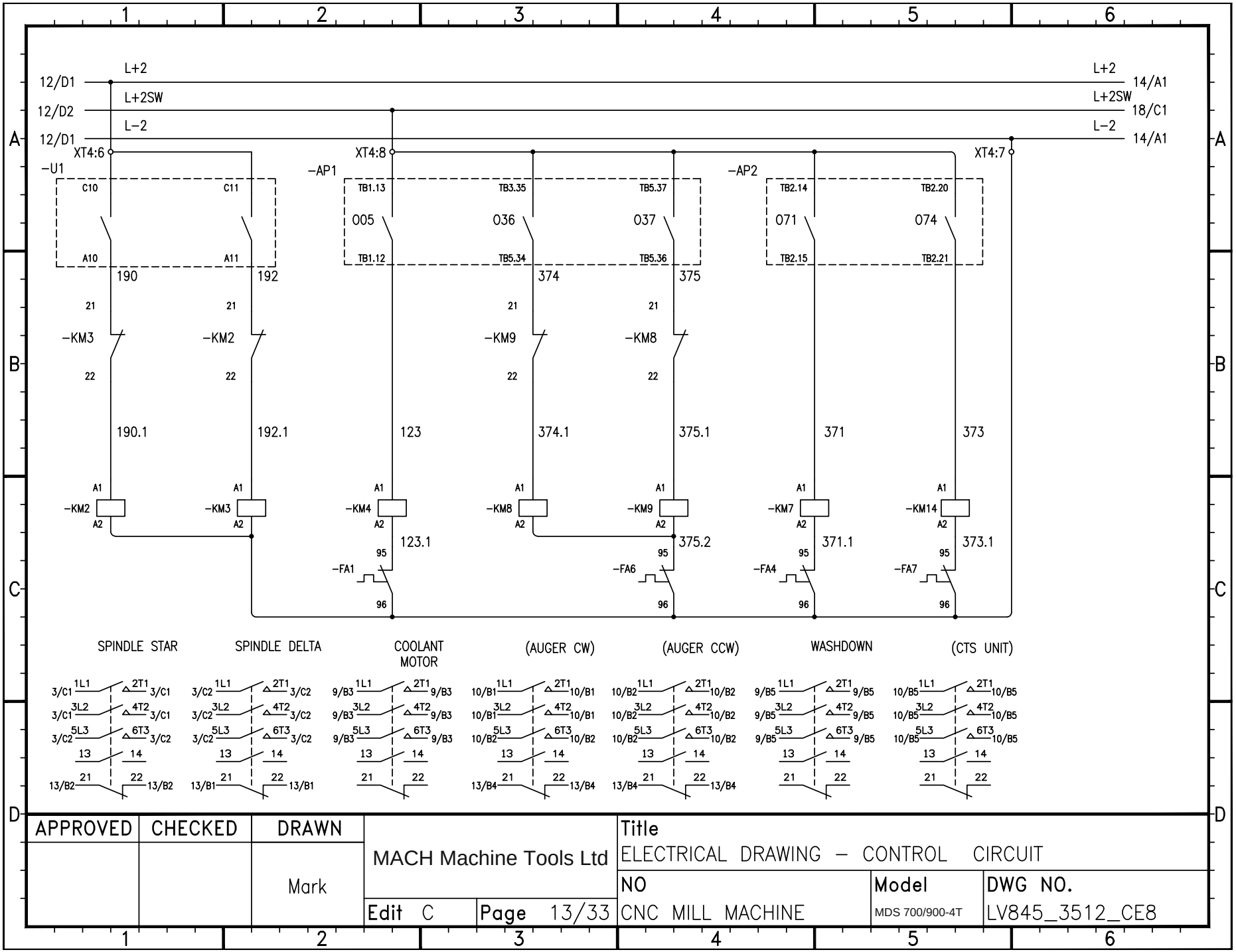

APPROVED	CHECKED	DRAWN		Title
		Mark	MACH Machine Tools Ltd	ELECTRICAL DRAWING – CONTROL CIRCUIT
			Edit C / Page 13/33	NO: CNC MILL MACHINE / Model: MDS 700/900-4T / DWG NO.: LV845_3512_CE8

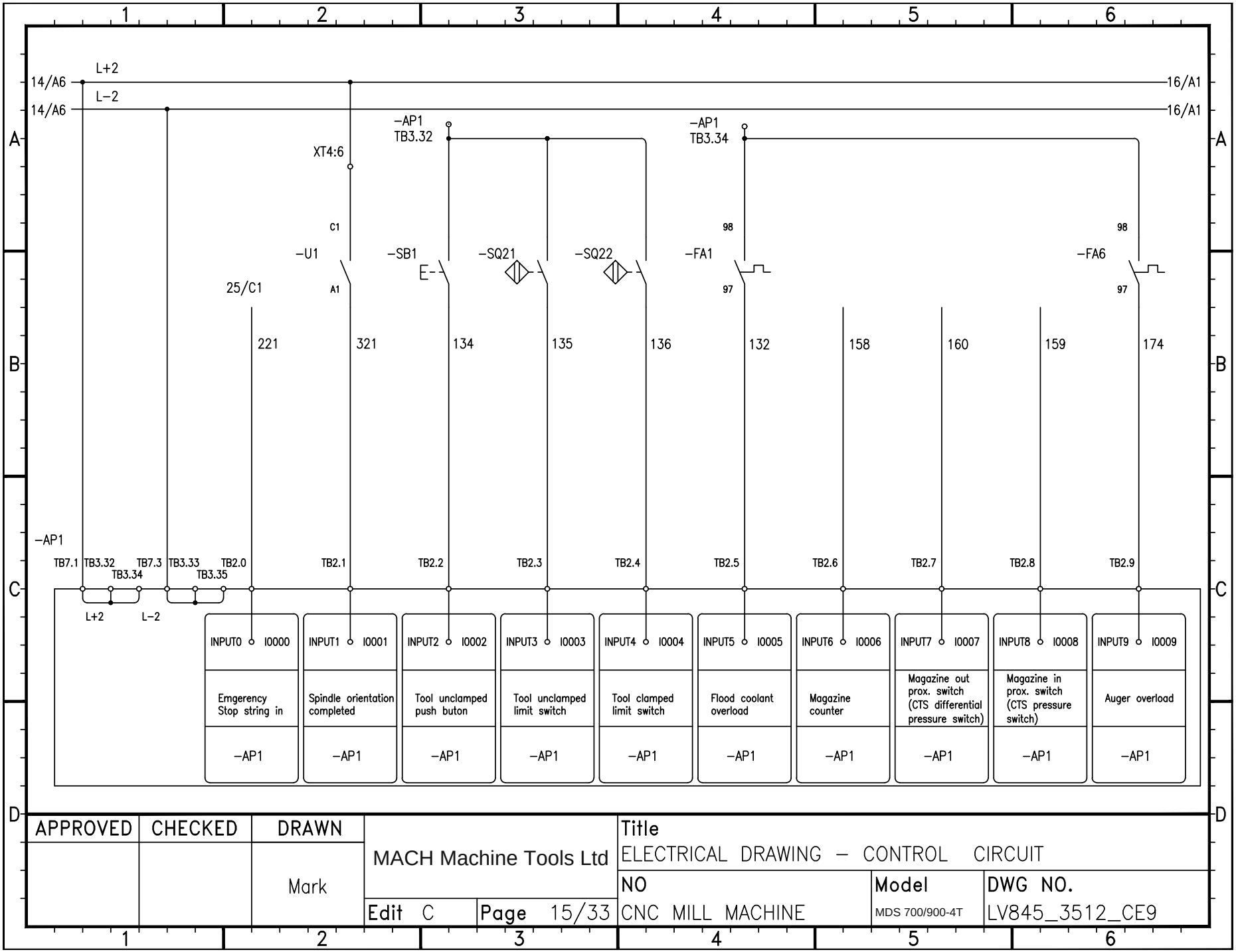
L+2
L−2
14/A6
16/A1
−AP1
TB3.32
TB3.34
XT4:6
C1
−U1
A1
25/C1
−SB1
E-
−SQ21
−SQ22
98
97
−FA1
−FA6
221
321
134
135
136
132
158
160
159
174
TB7.1
TB3.32
TB7.3
TB3.33
TB2.0
TB3.34
TB3.35
TB2.1
TB2.2
TB2.3
TB2.4
TB2.5
TB2.6
TB2.7
TB2.8
TB2.9
INPUT0 I0000
INPUT1 I0001
INPUT2 I0002
INPUT3 I0003
INPUT4 I0004
INPUT5 I0005
INPUT6 I0006
INPUT7 I0007
INPUT8 I0008
INPUT9 I0009
Emgerency Stop string in
Spindle orientation completed
Tool unclamped push buton
Tool unclamped limit switch
Tool clamped limit switch
Flood coolant overload
Magazine counter
Magazine out prox. switch (CTS differential pressure switch)
Magazine in prox. switch (CTS pressure switch)
Auger overload
APPROVED
CHECKED
DRAWN
Mark
MACH Machine Tools Ltd
Edit C
Page 15/33
Title
ELECTRICAL DRAWING – CONTROL CIRCUIT
NO
CNC MILL MACHINE
Model
MDS 700/900-4T
DWG NO.
LV845_3512_CE9

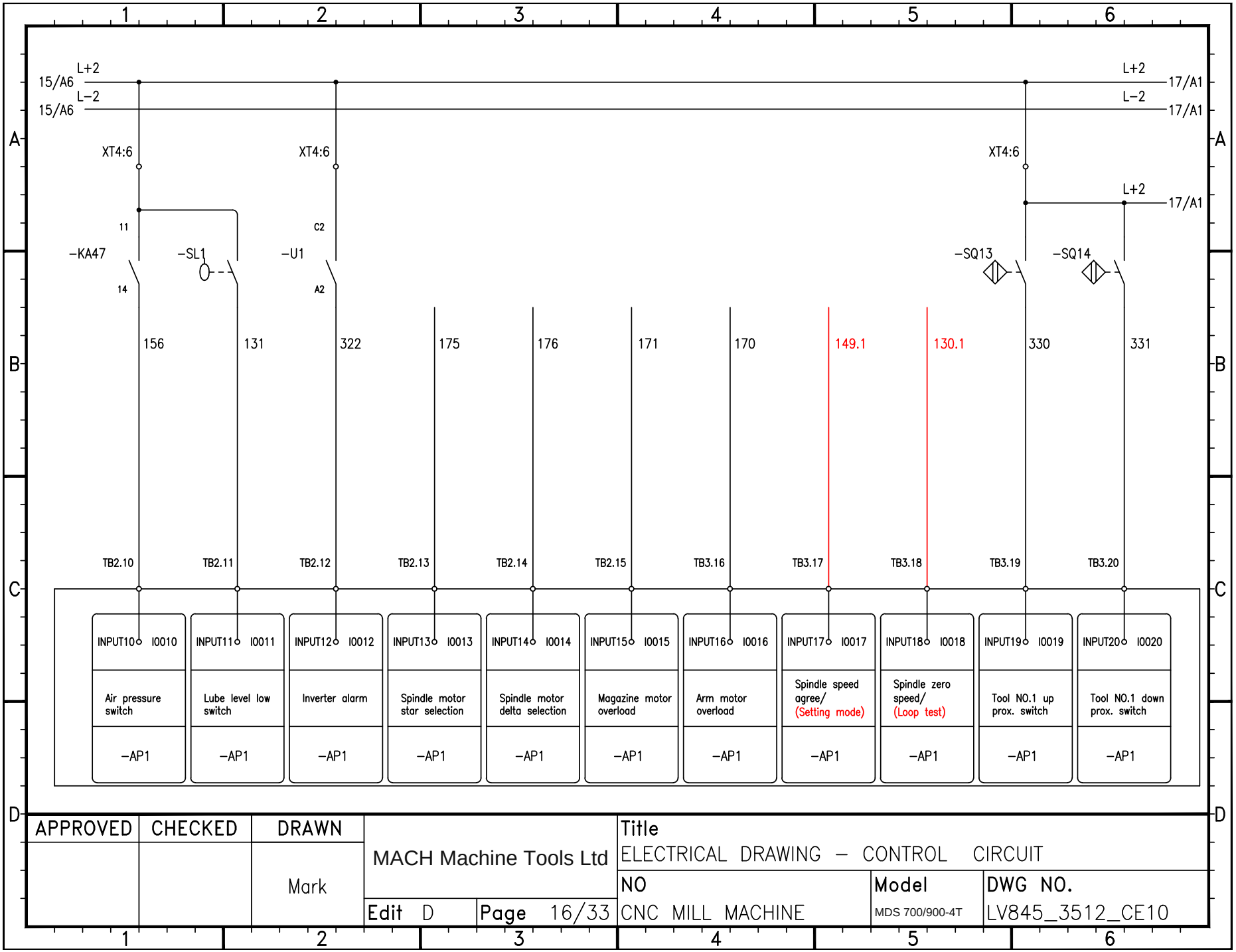

APPROVED	CHECKED	DRAWN		Title
		Mark	MACH Machine Tools Ltd	ELECTRICAL DRAWING – CONTROL CIRCUIT
			Edit D / Page 16/33	NO: CNC MILL MACHINE / Model: MDS 700/900-4T / DWG NO. LV845_3512_CE10

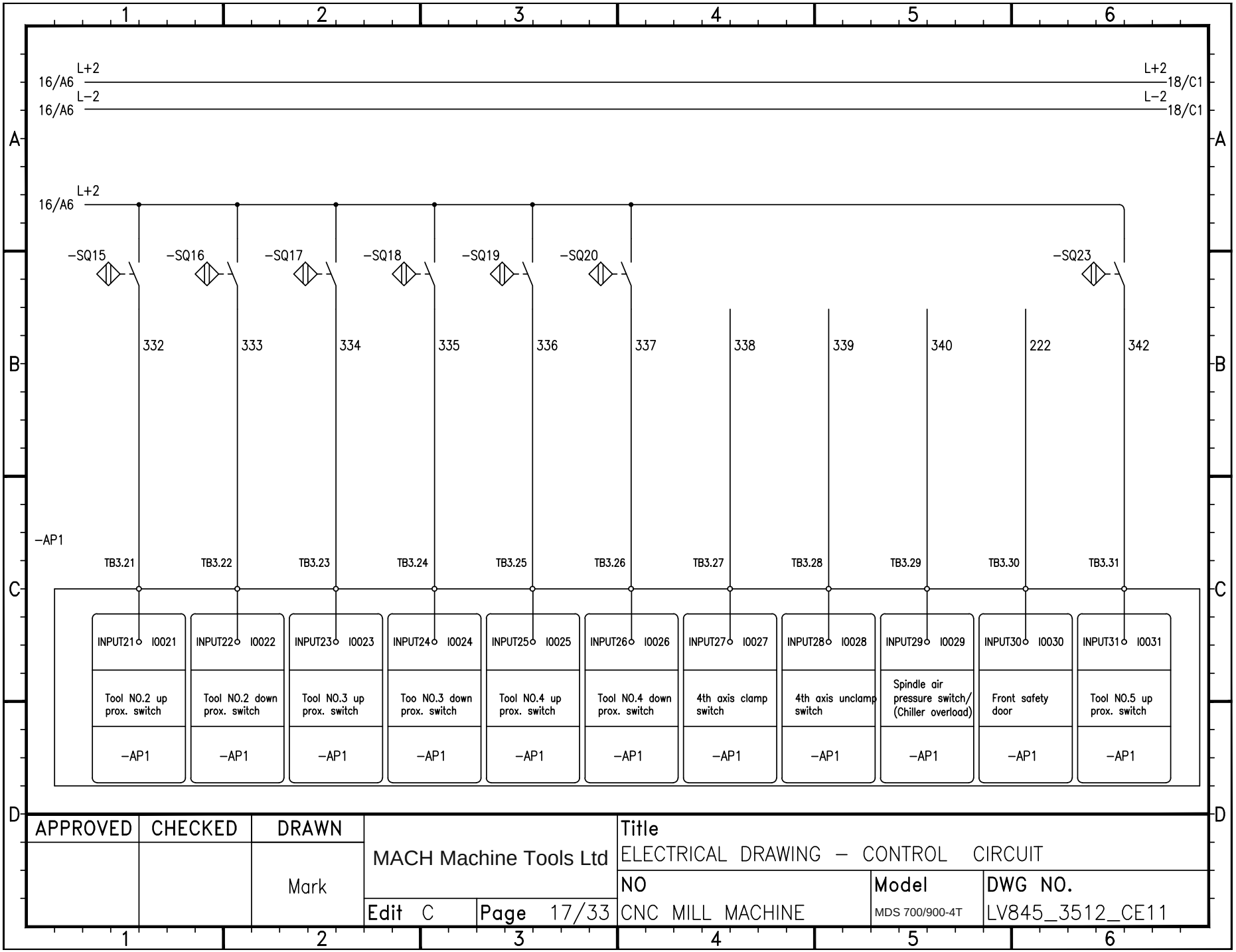
L+2
16/A6
L+2
18/C1
L−2
16/A6
L−2
18/C1
L+2
16/A6
−SQ15
−SQ16
−SQ17
−SQ18
−SQ19
−SQ20
−SQ23
332
333
334
335
336
337
338
339
340
222
342
−AP1
TB3.21
TB3.22
TB3.23
TB3.24
TB3.25
TB3.26
TB3.27
TB3.28
TB3.29
TB3.30
TB3.31
INPUT21 I0021
INPUT22 I0022
INPUT23 I0023
INPUT24 I0024
INPUT25 I0025
INPUT26 I0026
INPUT27 I0027
INPUT28 I0028
INPUT29 I0029
INPUT30 I0030
INPUT31 I0031
Tool NO.2 up prox. switch
Tool NO.2 down prox. switch
Tool NO.3 up prox. switch
Too NO.3 down prox. switch
Tool NO.4 up prox. switch
Tool NO.4 down prox. switch
4th axis clamp switch
4th axis unclamp switch
Spindle air pressure switch/ (Chiller overload)
Front safety door
Tool NO.5 up prox. switch
−AP1
APPROVED
CHECKED
DRAWN
Mark
MACH Machine Tools Ltd
Edit C
Page 17/33
Title
ELECTRICAL DRAWING – CONTROL CIRCUIT
NO
CNC MILL MACHINE
Model
MDS 700/900-4T
DWG NO.
LV845_3512_CE11

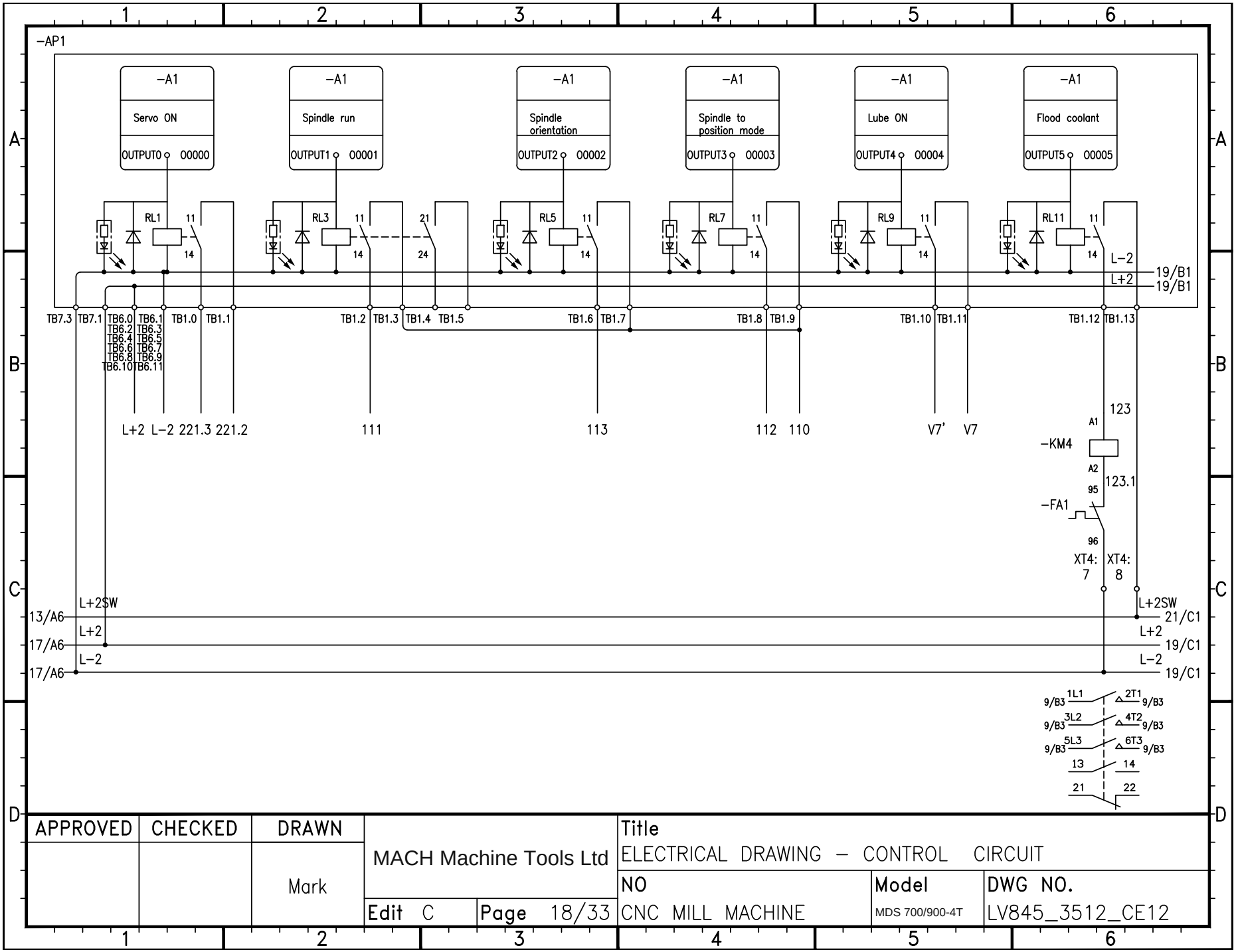

APPROVED	CHECKED	DRAWN		Title
		Mark	MACH Machine Tools Ltd	ELECTRICAL DRAWING – CONTROL CIRCUIT
			Edit C / Page 18/33	NO: CNC MILL MACHINE; Model: MDS 700/900-4T; DWG NO.: LV845_3512_CE12

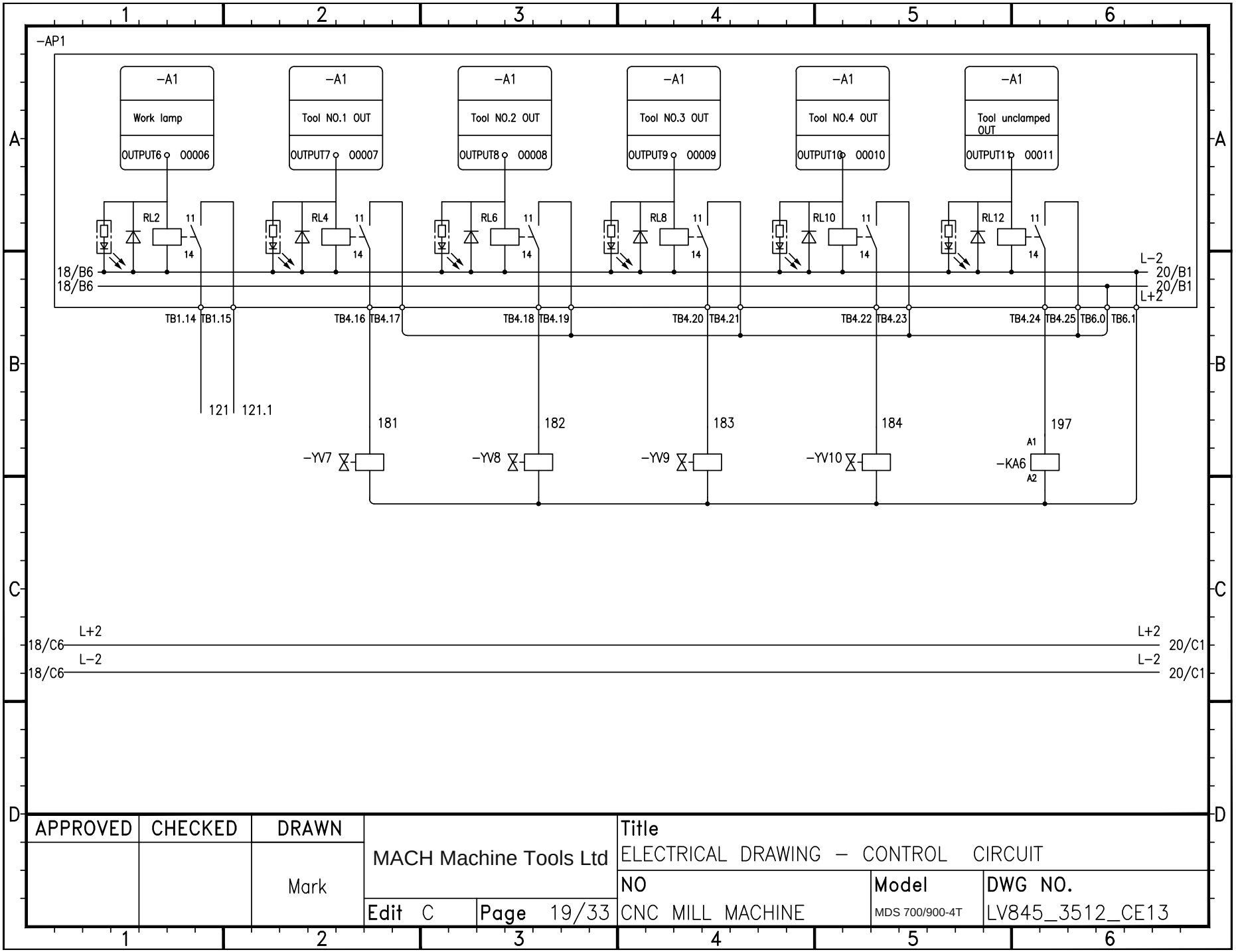

APPROVED	CHECKED	DRAWN		Title		
		Mark	MACH Machine Tools Ltd	ELECTRICAL DRAWING – CONTROL CIRCUIT		
			Edit C / Page 19/33	NO CNC MILL MACHINE	Model MDS 700/900-4T	DWG NO. LV845_3512_CE13

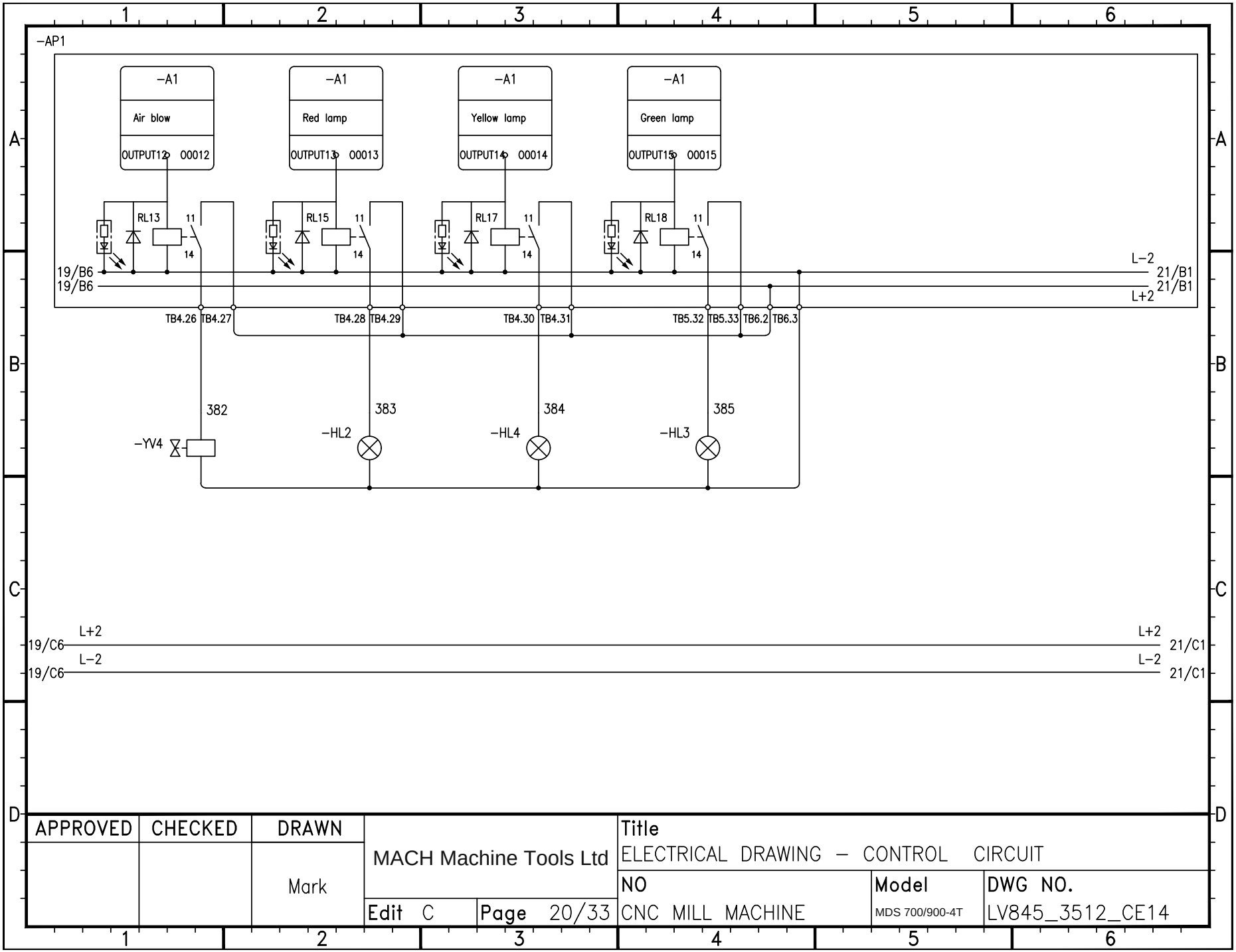
-AP1
-A1
Air blow
OUTPUT12 00012
-A1
Red lamp
OUTPUT13 00013
-A1
Yellow lamp
OUTPUT14 00014
-A1
Green lamp
OUTPUT15 00015
RL13
RL15
RL17
RL18
11
14
19/B6
19/B6
L-2
21/B1
21/B1
L+2
TB4.26 TB4.27
TB4.28 TB4.29
TB4.30 TB4.31
TB5.32 TB5.33 TB6.2 TB6.3
382
383
384
385
-YV4
-HL2
-HL4
-HL3
19/C6
L+2
L-2
21/C1
APPROVED
CHECKED
DRAWN
Mark
MACH Machine Tools Ltd
Edit C
Page 20/33
Title
ELECTRICAL DRAWING - CONTROL CIRCUIT
NO
CNC MILL MACHINE
Model
MDS 700/900-4T
DWG NO.
LV845_3512_CE14

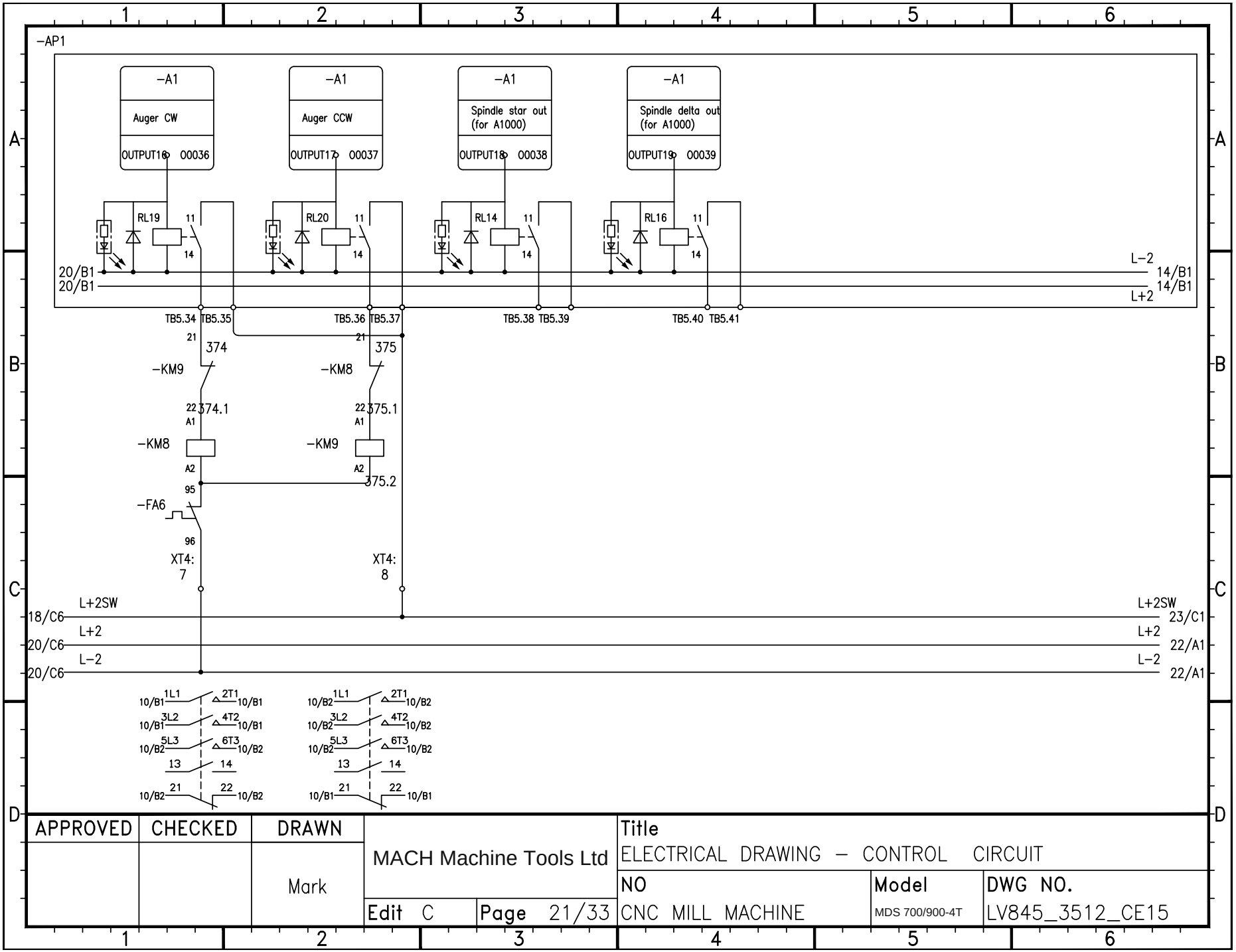

APPROVED	CHECKED	DRAWN		Title
		Mark	MACH Machine Tools Ltd	ELECTRICAL DRAWING – CONTROL CIRCUIT
			Edit C / Page 21/33	NO: CNC MILL MACHINE; Model: MDS 700/900-4T; DWG NO.: LV845_3512_CE15

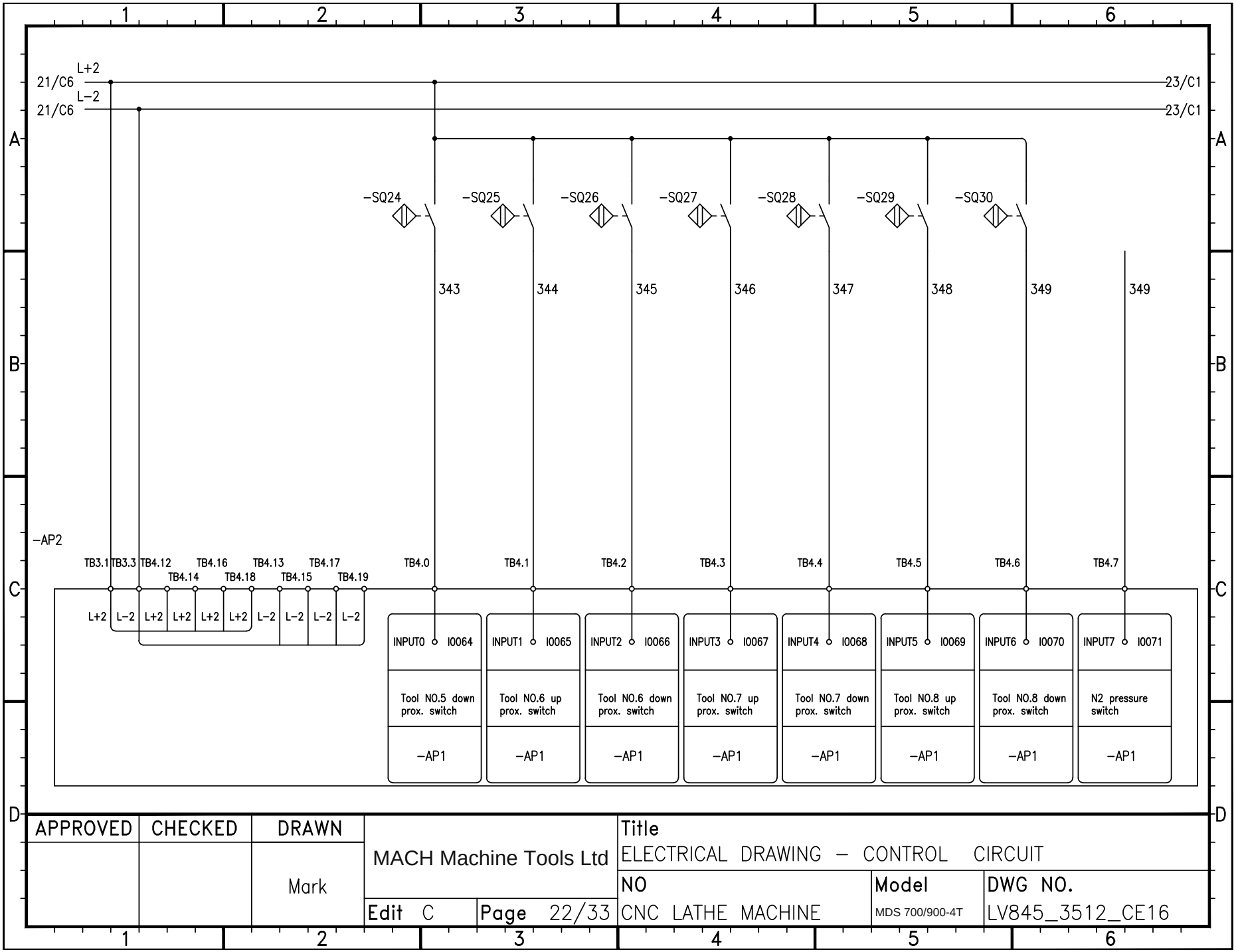

APPROVED	CHECKED	DRAWN		Title		
		Mark	MACH Machine Tools Ltd	ELECTRICAL DRAWING – CONTROL CIRCUIT		
			Edit C / Page 22/33	NO CNC LATHE MACHINE	Model MDS 700/900-4T	DWG NO. LV845_3512_CE16

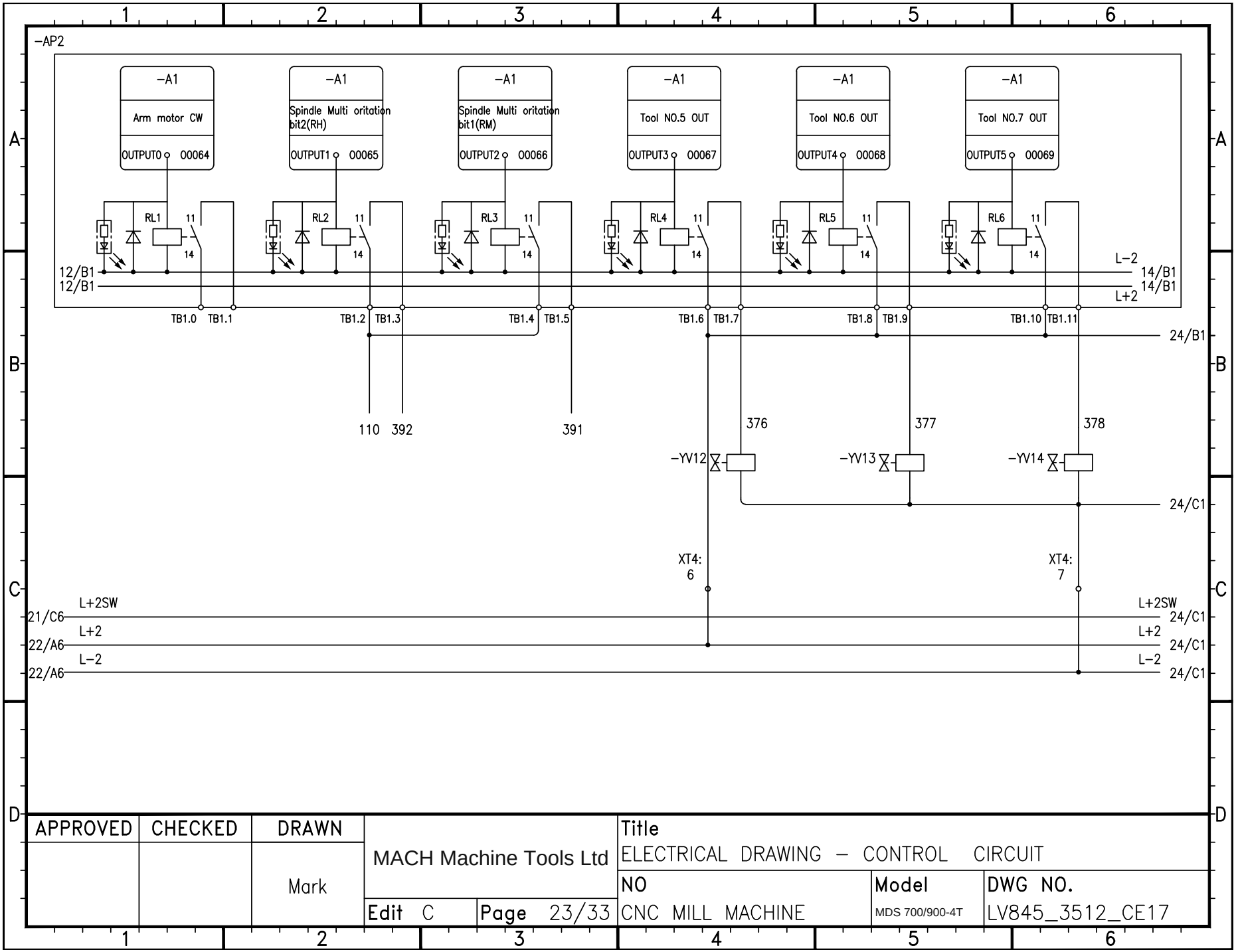

APPROVED	CHECKED	DRAWN		Title
		Mark	MACH Machine Tools Ltd	ELECTRICAL DRAWING – CONTROL CIRCUIT
			Edit C / Page 23/33	NO: CNC MILL MACHINE / Model: MDS 700/900-4T / DWG NO.: LV845_3512_CE17

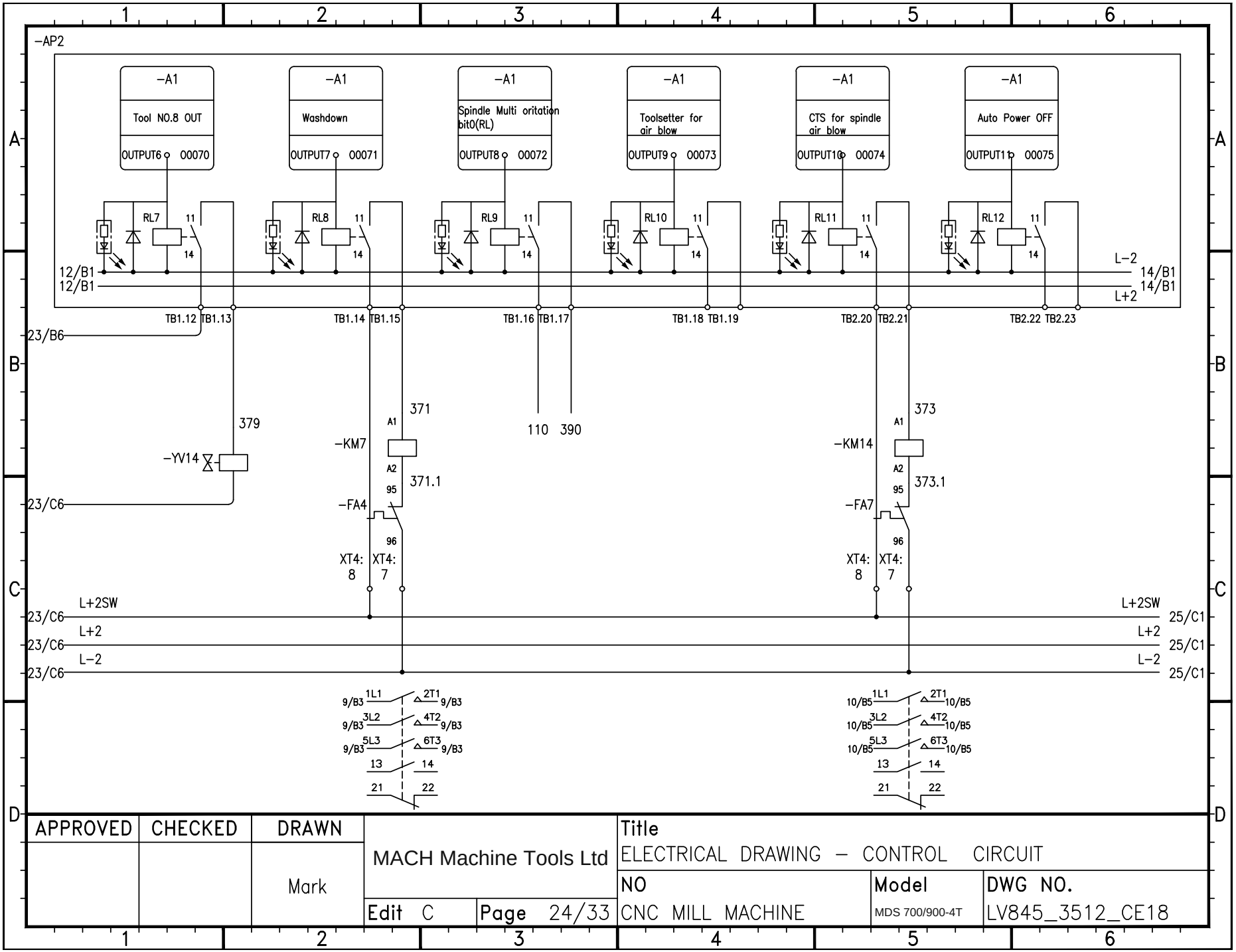

APPROVED	CHECKED	DRAWN		Title
		Mark	MACH Machine Tools Ltd	ELECTRICAL DRAWING – CONTROL CIRCUIT
			Edit C / Page 24/33	NO: CNC MILL MACHINE / Model: MDS 700/900-4T / DWG NO. LV845_3512_CE18

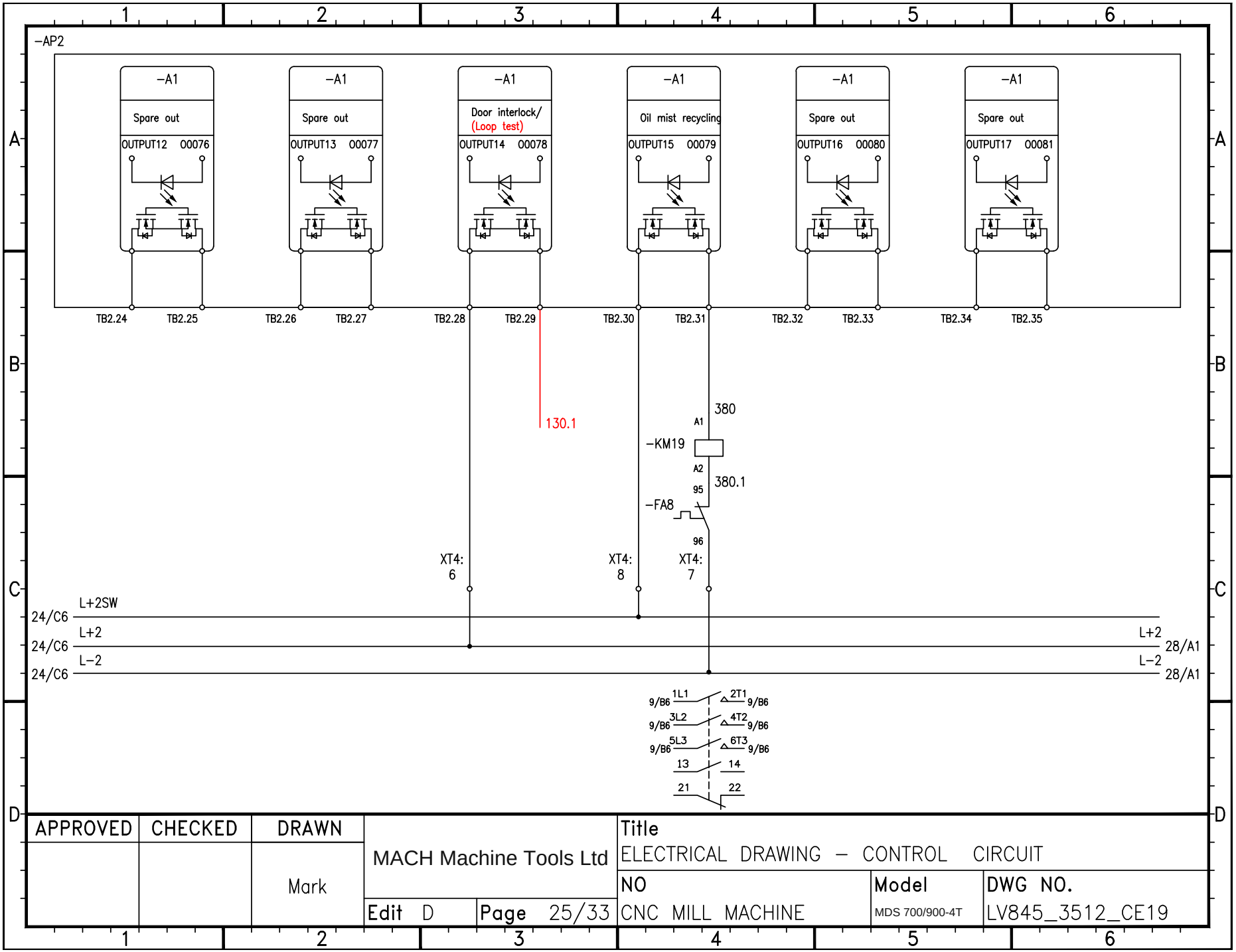

APPROVED	CHECKED	DRAWN		Title
		Mark	MACH Machine Tools Ltd	ELECTRICAL DRAWING – CONTROL CIRCUIT
			Edit D / Page 25/33	NO: CNC MILL MACHINE / Model: MDS 700/900-4T / DWG NO. LV845_3512_CE19

APPROVED	CHECKED	DRAWN		Title
		Mark	MACH Machine Tools Ltd	ELECTRICAL DRAWING – CONTROL CIRCUIT
			Edit C / Page 26/33	NO: CNC MILL MACHINE / Model: MDS 700/900-4T / DWG NO.: LV845_3512_CE20

APPROVED	CHECKED	DRAWN		Title
		Mark	MACH Machine Tools Ltd	ELECTRICAL DRAWING – CONTROL CIRCUIT
			Edit C / Page 27/33	NO: CNC MILL MACHINE / Model: MDS 700/900-4T / DWG NO.: LV845_3512_CE21

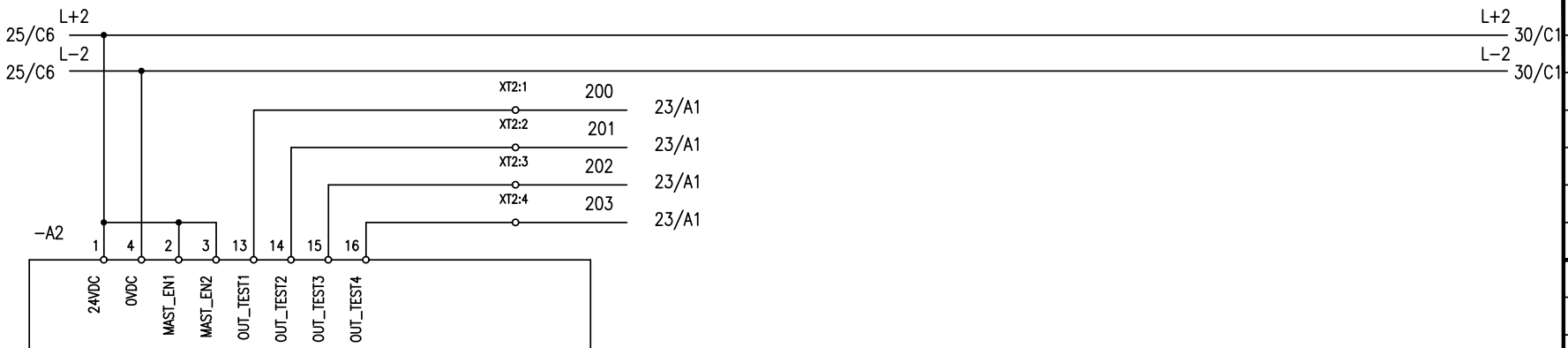

17	INPUT1	23/C1	Emergency stop button CH. 1
18	INPUT2	23/C1	Emergency stop button CH. 2
19	INPUT3	23/C2	OT_travel limit switch
20	INPUT4	23/C3	Door interlock locked limit
21	INPUT5	23/C3	Door interlock locked limit
22	INPUT6	23/C4	Machine ready signal
23	INPUT7	23/C4	Mode select key
24	INPUT8	23/C5	Power on signal
5	OSSD1_A	24/C1	Servo power on
6	OSSD1_B		
7	REST_FBK1	24/B2	OSSD1 Reset
9	OSSD2_A	24/C3	Mode select key status signal
10	OSSD2_B		
11	REST_FBK2	24/C4	OSSD2 Reset
8	OUT_STAT1	25/A1	Emergency stop button unlock
12	OUT_STAT2	25/A2	Door interlock locked

APPROVED	CHECKED	DRAWN		Title		
		Mark	MACH Machine Tools Ltd	ELECTRICAL DRAWING – CONTROL CIRCUIT		
			Edit C / Page 28/33	NO: CNC MILL MACHINE	Model: MDS 700/900-4T	DWG NO.: LV845_3512_CE22

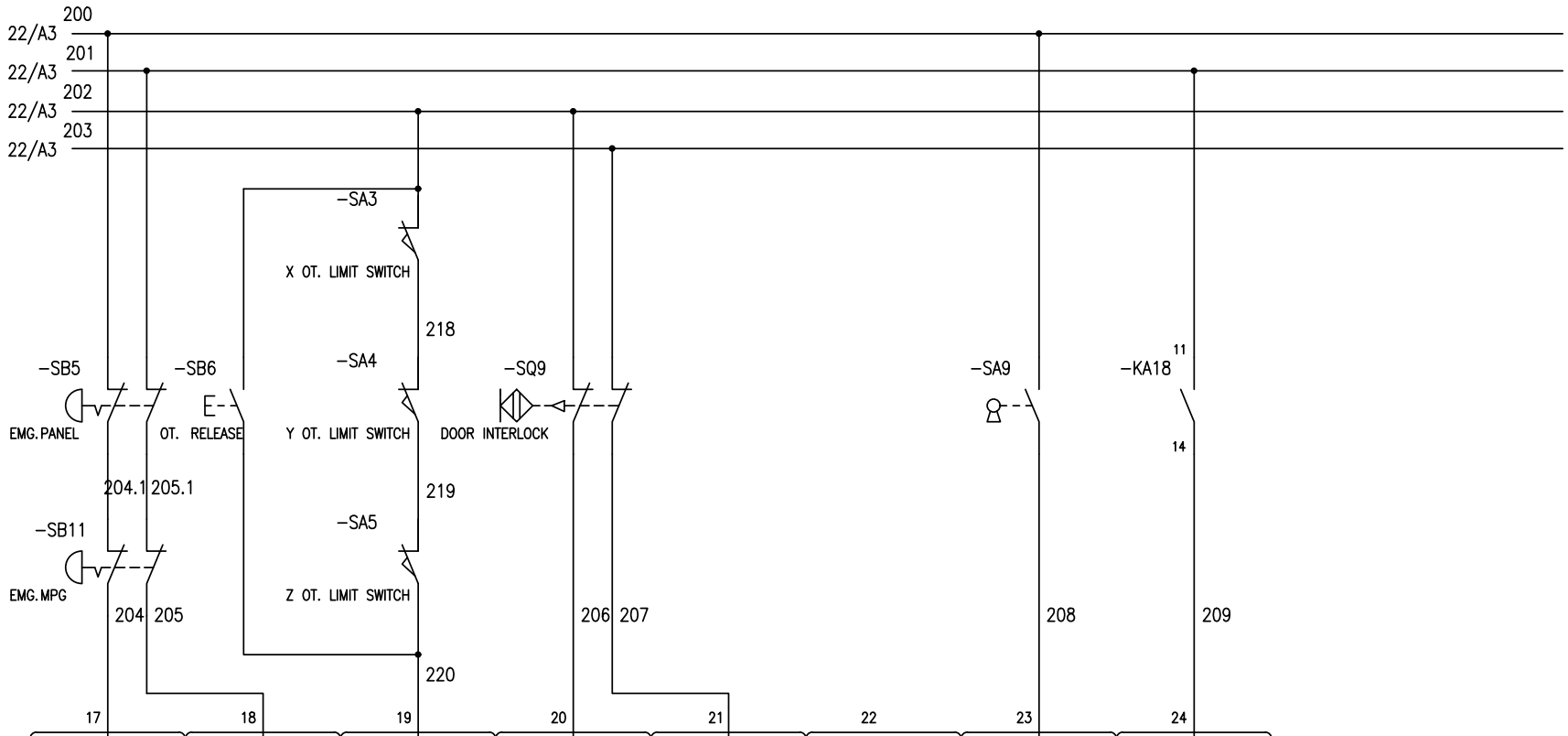

APPROVED	CHECKED	DRAWN	MACH Machine Tools Ltd	Title ELECTRICAL DRAWING – CONTROL CIRCUIT		
		Mark		NO CNC MILL MACHINE	Model MDS 700/900-4T	DWG NO. LV845_3512_CE23
			Edit C / Page 29/33			

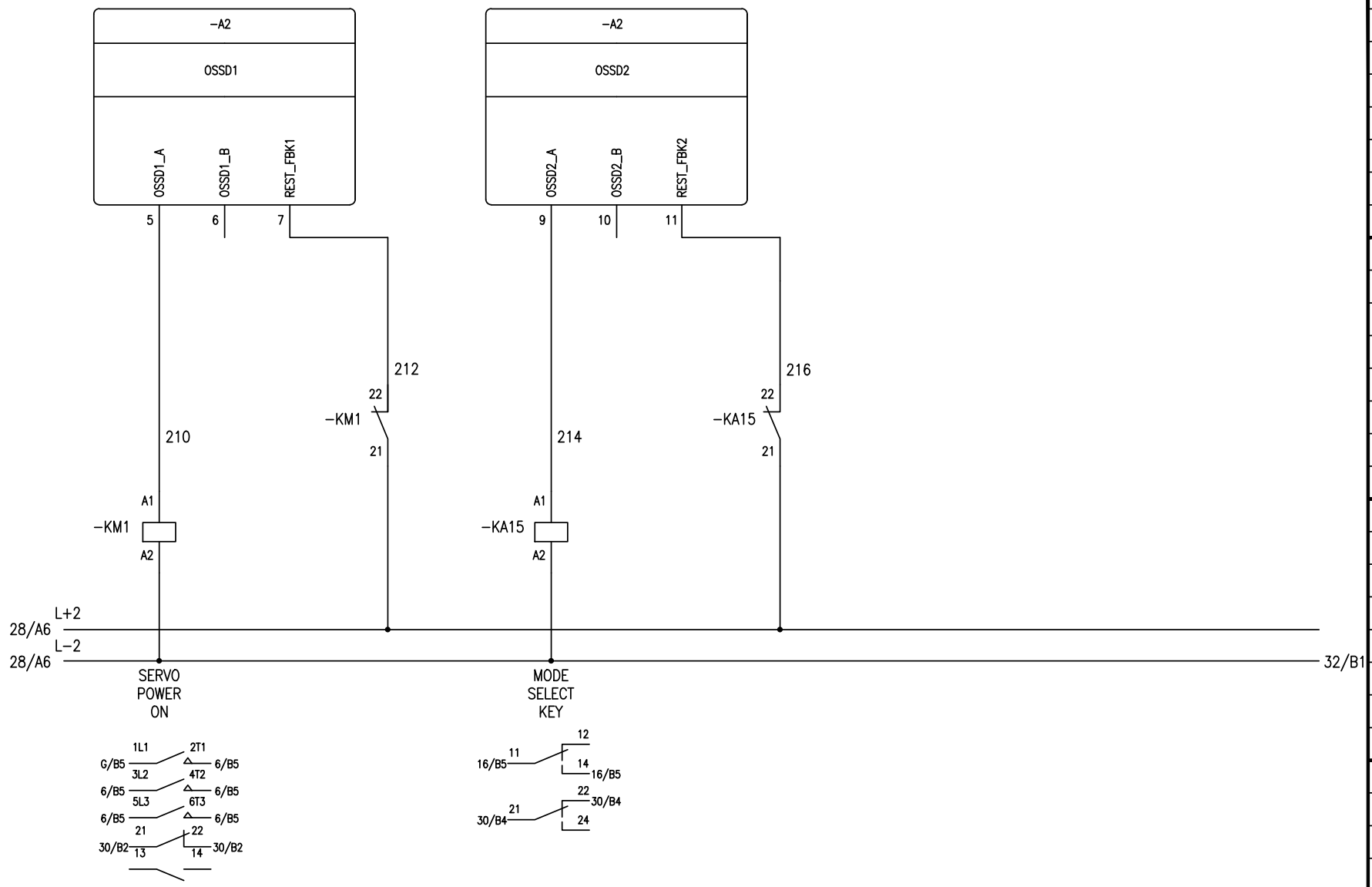

APPROVED	CHECKED	DRAWN		Title		
		Mark	MACH Machine Tools Ltd	ELECTRICAL DRAWING – CONTROL CIRCUIT		
			Edit C / Page 30/33	NO CNC MILL MACHINE	Model MDS 700/900-4T	DWG NO. LV845_3512_CE24

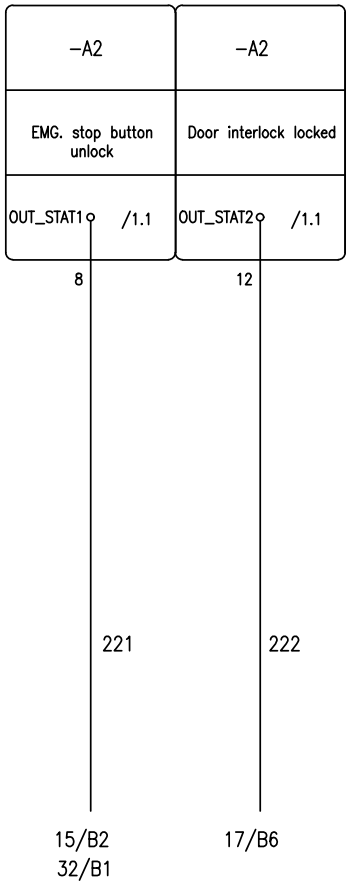

APPROVED	CHECKED	DRAWN		Title
		Mark	MACH Machine Tools Ltd	ELECTRICAL DRAWING – CONTROL CIRCUIT
			Edit C / Page 31/33	NO: CNC MILL MACHINE / Model: MDS 700/900-4T / DWG NO. LV845_3512_CE25

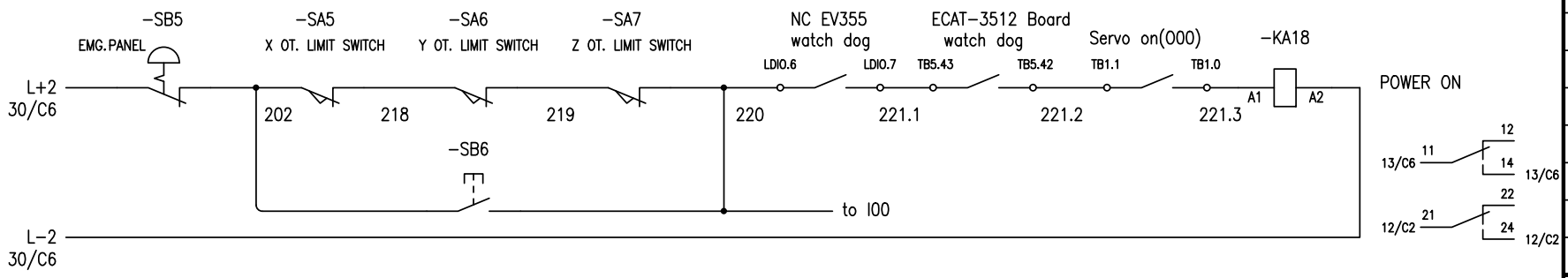

APPROVED	CHECKED	DRAWN		Title		
		Mark	MACH Machine Tools Ltd	ELECTRICAL DRAWING – ESTOP STRING FOR CNC(none CE)		
				NO	Model	DWG NO.
			Edit C / Page 33/33	CNC MILL MACHINE	MDS 700/900-4T	VK3_3512_CE26.1

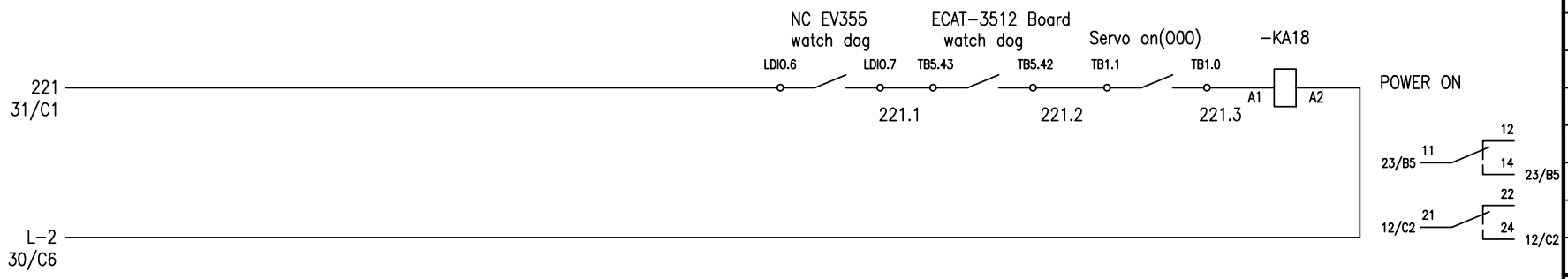

APPROVED	CHECKED	DRAWN		Title		
		Mark	MACH Machine Tools Ltd	ELECTRICAL DRAWING – ESTOP STRING FOR CNC		
				NO	Model	DWG NO.
			Edit C / Page 32/33	CNC MILL MACHINE	MDS 700/900-4T	LV845_3512_CE26

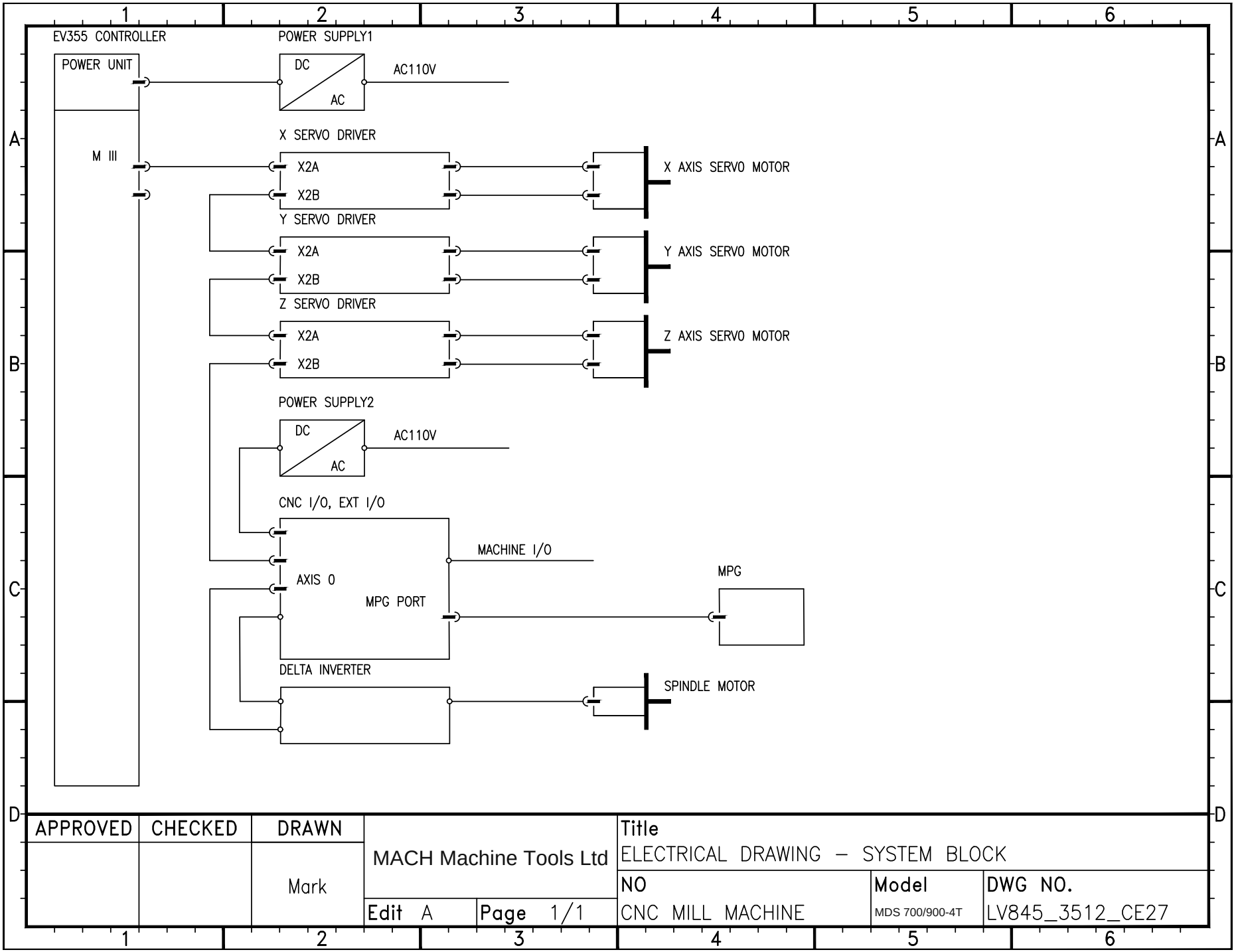
EV355 CONTROLLER
POWER UNIT
M III
POWER SUPPLY1
DC
AC
AC110V
X SERVO DRIVER
X2A
X2B
X AXIS SERVO MOTOR
Y SERVO DRIVER
X2A
X2B
Y AXIS SERVO MOTOR
Z SERVO DRIVER
X2A
X2B
Z AXIS SERVO MOTOR
POWER SUPPLY2
DC
AC
AC110V
CNC I/O, EXT I/O
AXIS 0
MPG PORT
MACHINE I/O
MPG
DELTA INVERTER
SPINDLE MOTOR
APPROVED
CHECKED
DRAWN
Mark
MACH Machine Tools Ltd
Edit A
Page 1/1
Title
ELECTRICAL DRAWING – SYSTEM BLOCK
NO
CNC MILL MACHINE
Model
MDS 700/900-4T
DWG NO.
LV845_3512_CE27

MACH
MACHINE TOOLS

PRECISION MACHINE TOOLS · SALES · SERVICE · SUPPORT

UK & EUROPE

European Head Office

Units 1–3 Chapel Lane,
Clay Hill, Fishponds,
Bristol BS5 7EY,
United Kingdom

T +44 (0) 117 965 2706
E info@machmt.co.uk

NORTH AMERICA

US Office

200 Republic Ave,
Joliet, IL 60435,
USA

T +1 313 489 9667
E sales@machmt.com

ASIA

Asia Office

1 F.-A1, No. 50-26,
Shanzhuhu Rd,
Qionglin Township,
Hsinchu County,
Taiwan 307005

E sales@machmt.com

www.machmt.com

© MACH Machine Tools. Specifications subject to change without notice.